GAP POWER
The Ultimate Toolbox

Click Here To View Item at www.GapPower.com

Sales • Rentals
Parts & Service

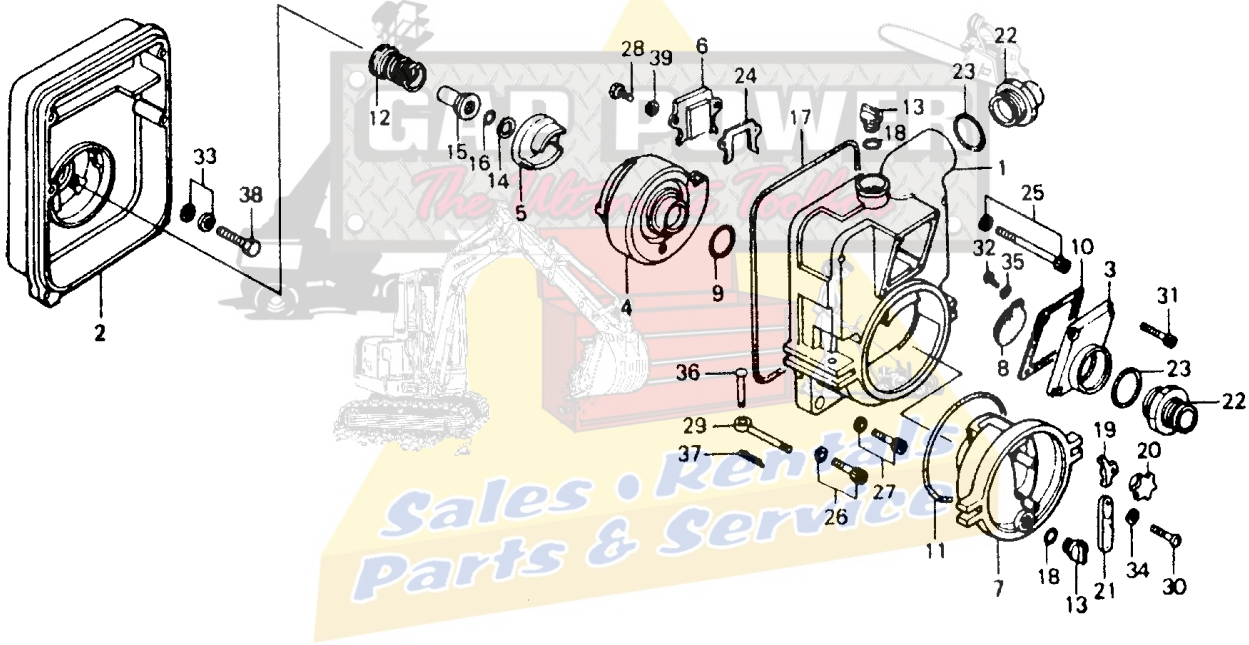
2
33
38
12
15
16
14
5
28
39
6
24
4
9
17
13
18
1
22
23
25
10
32
35
3
31
8
23
22
36
29
37
27
26
19
20
11
7
18
21
34
30
13

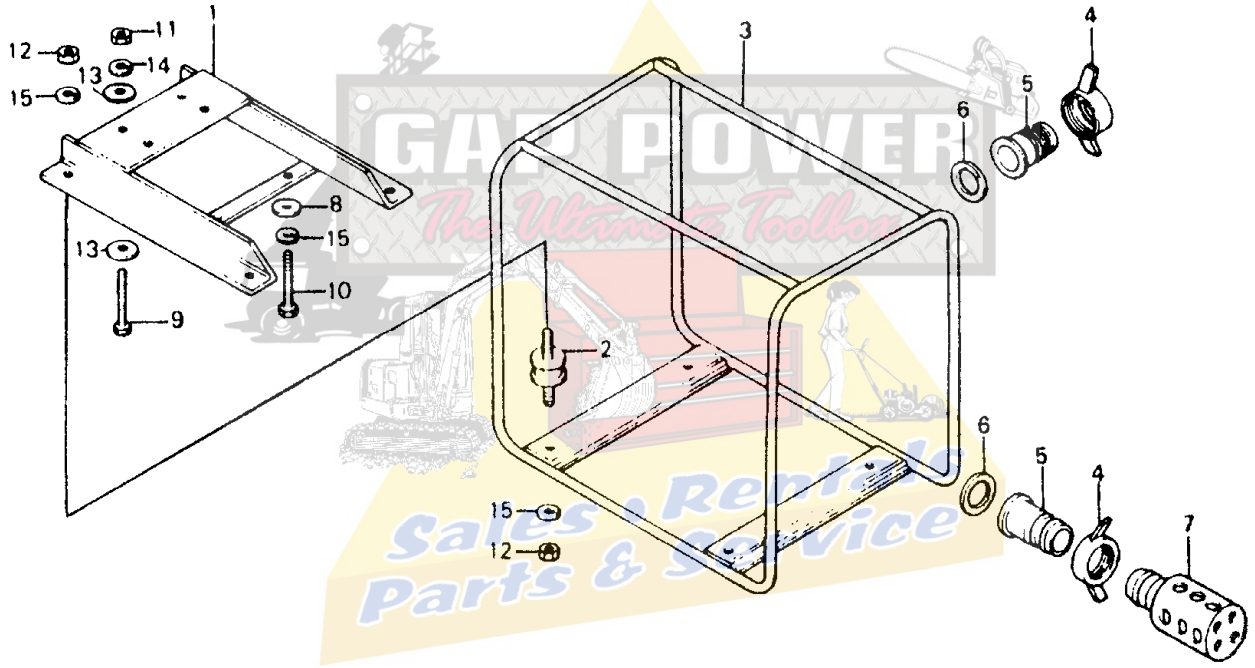
1
2
3
4
5
6
7
8
9
10
11
12
13
14
15

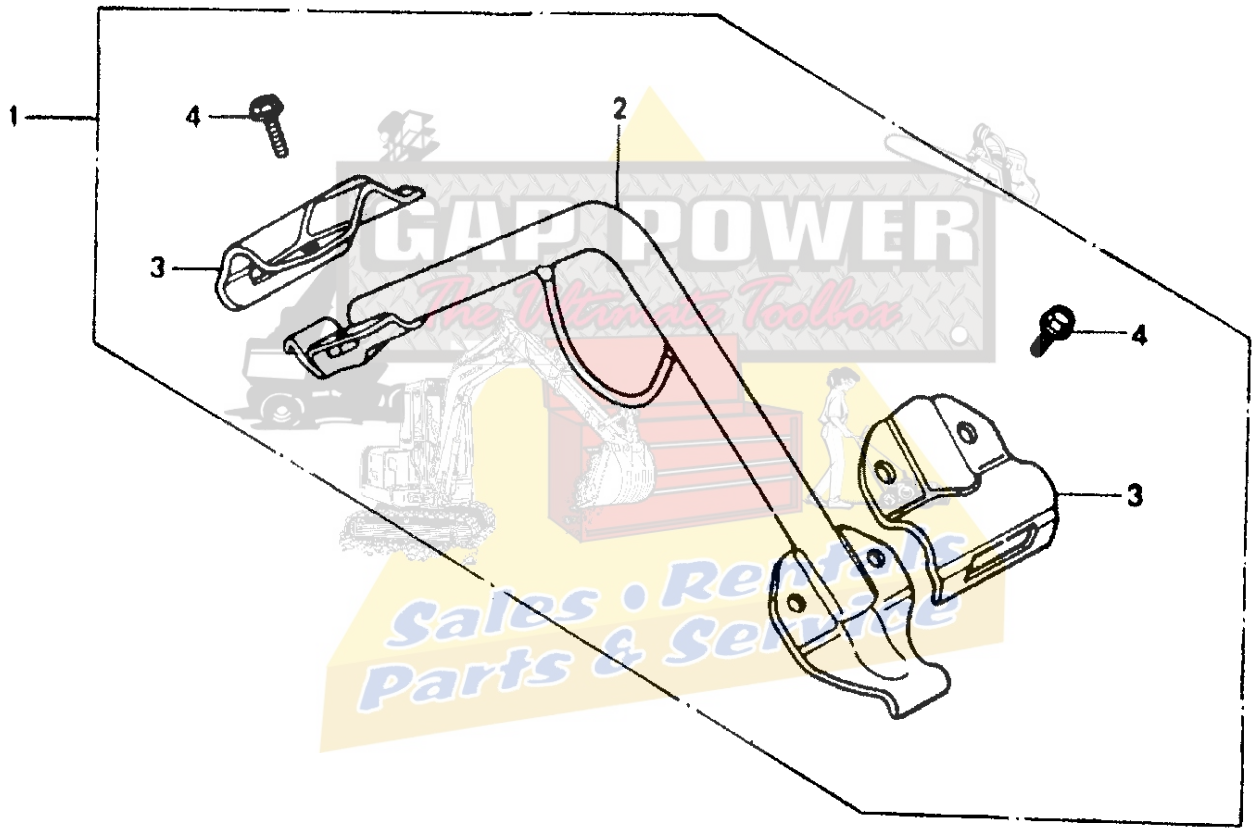


GAP POWER
The Ultimate Toolbox
Sales • Rentals
Parts & Service

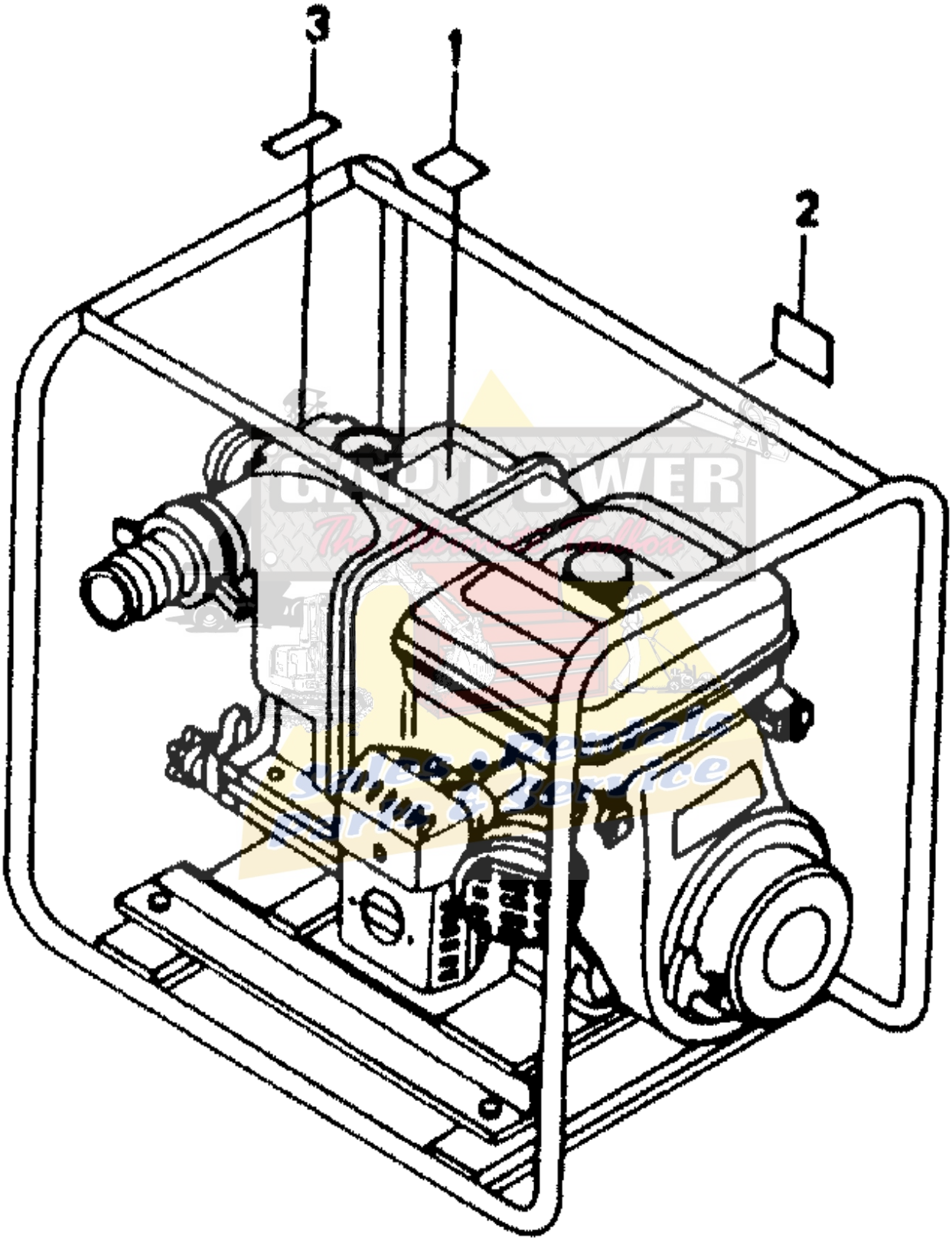
3
1
2

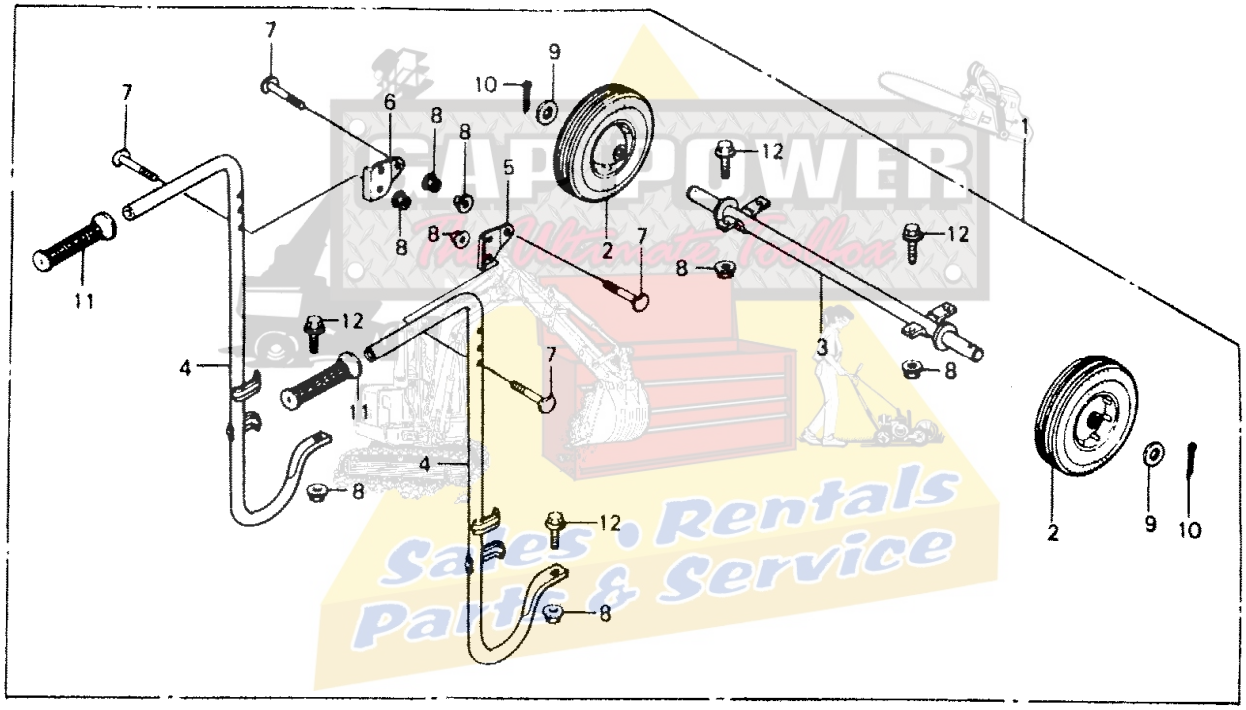
7
7
6
8
8
9
10
5
12
1
8
8
2
7
12
8
11
12
4
7
3
8
11
4
8
12
2
9
10
8

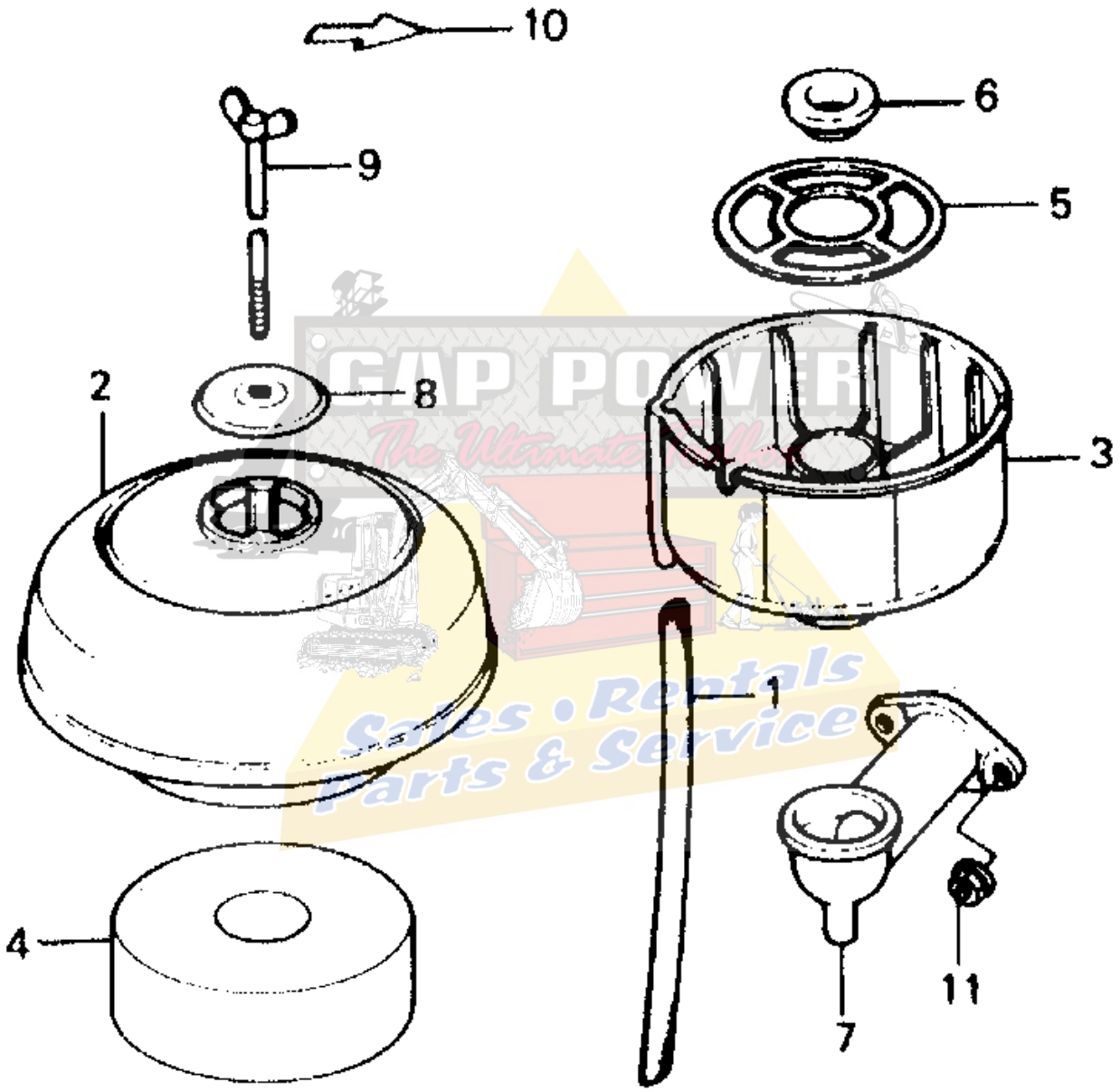


CAP POWER
The Ultimate Tools
Sales • Rentals
Parts & Service

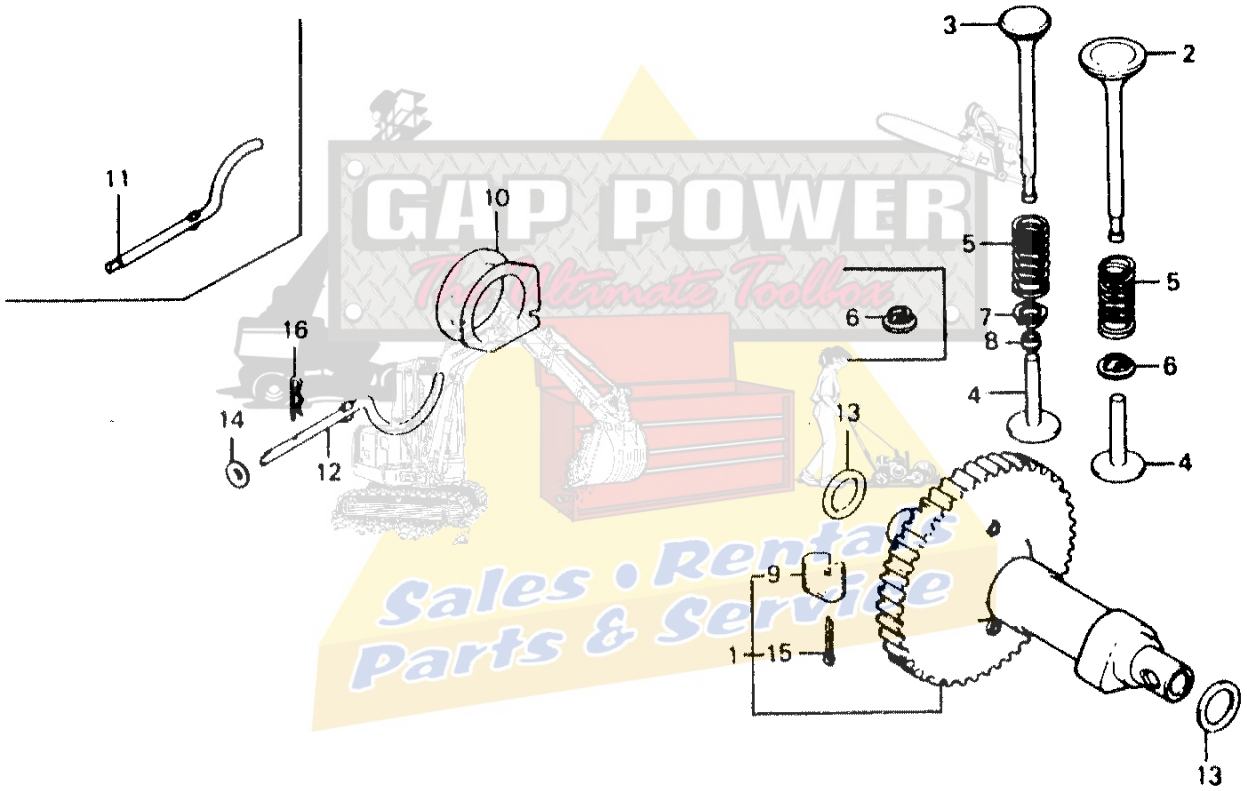


GAP POWER
The Ultimate Toolbox
Sales • Rentals
Parts & Service

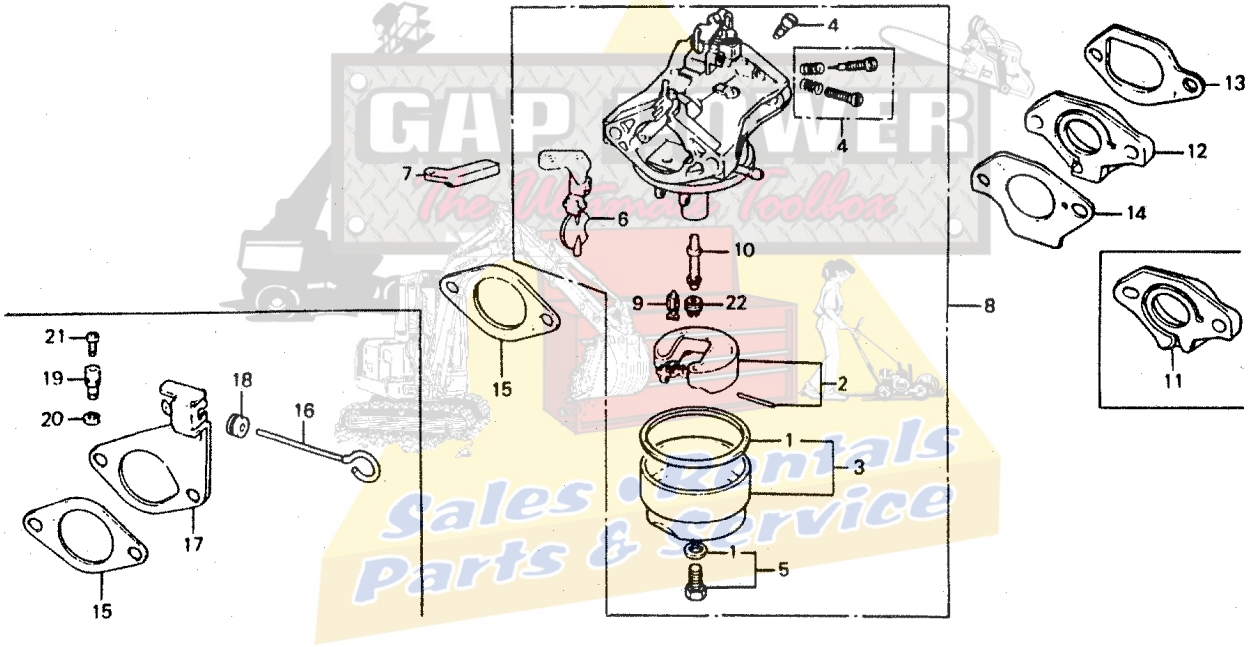
4
4
13
12
14
7
6
10
9
22
8
11
21
19
20
18
16
15
2
1
3
17
1
5
15

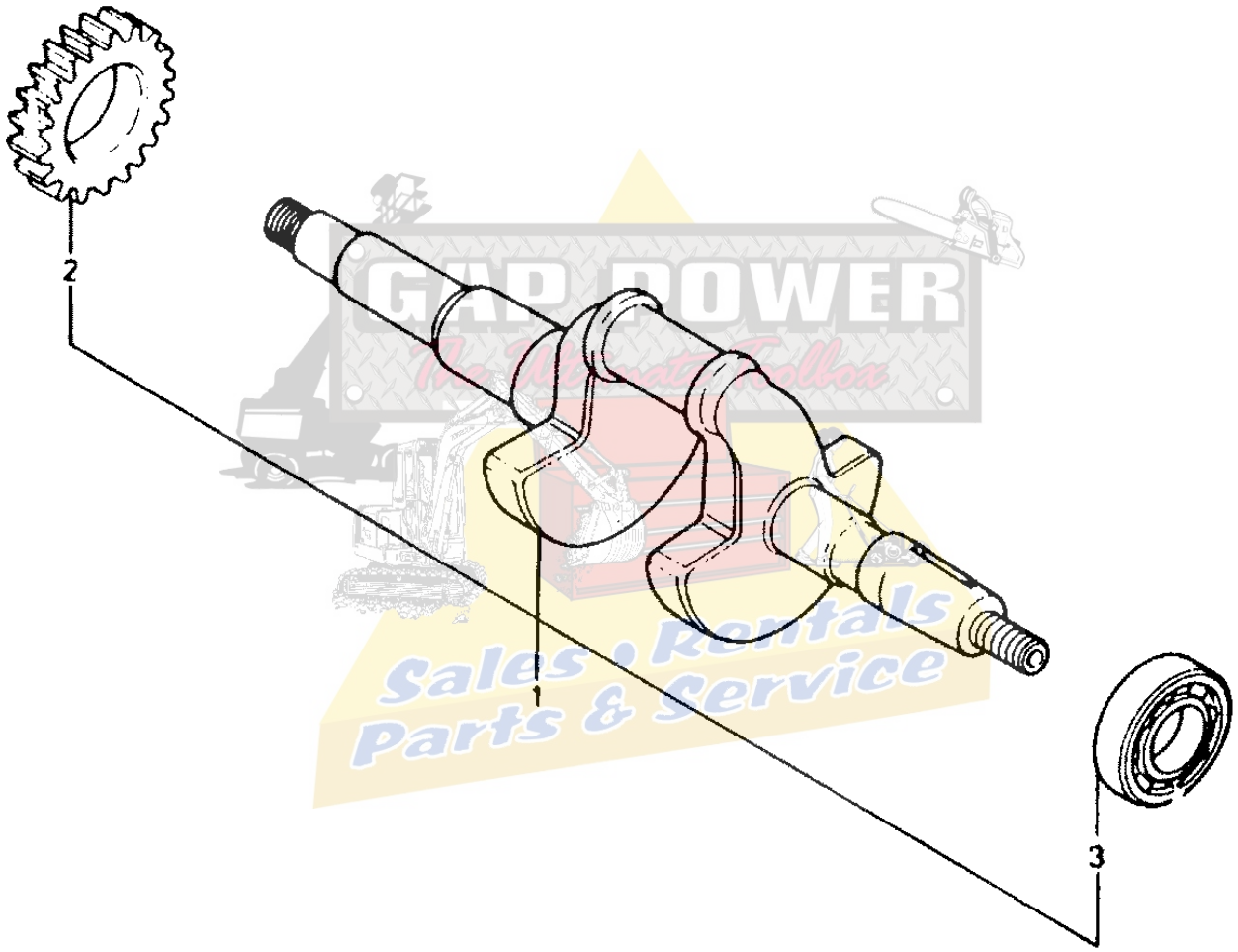


GAP POWER
The Ultimate Toolbox
Sales, Rentals
Parts & Service

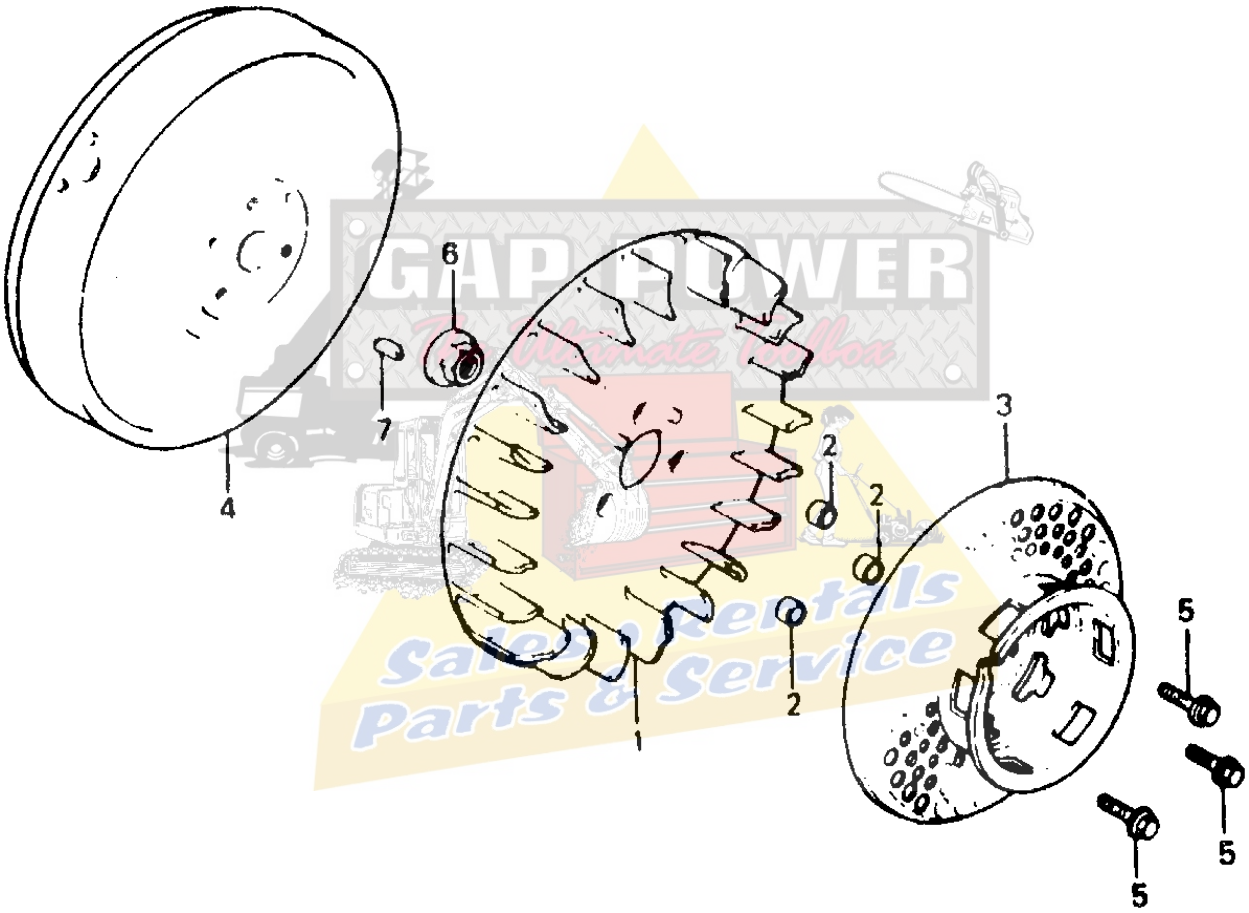
6
7
4
1
2
2
2
3
5
5
5

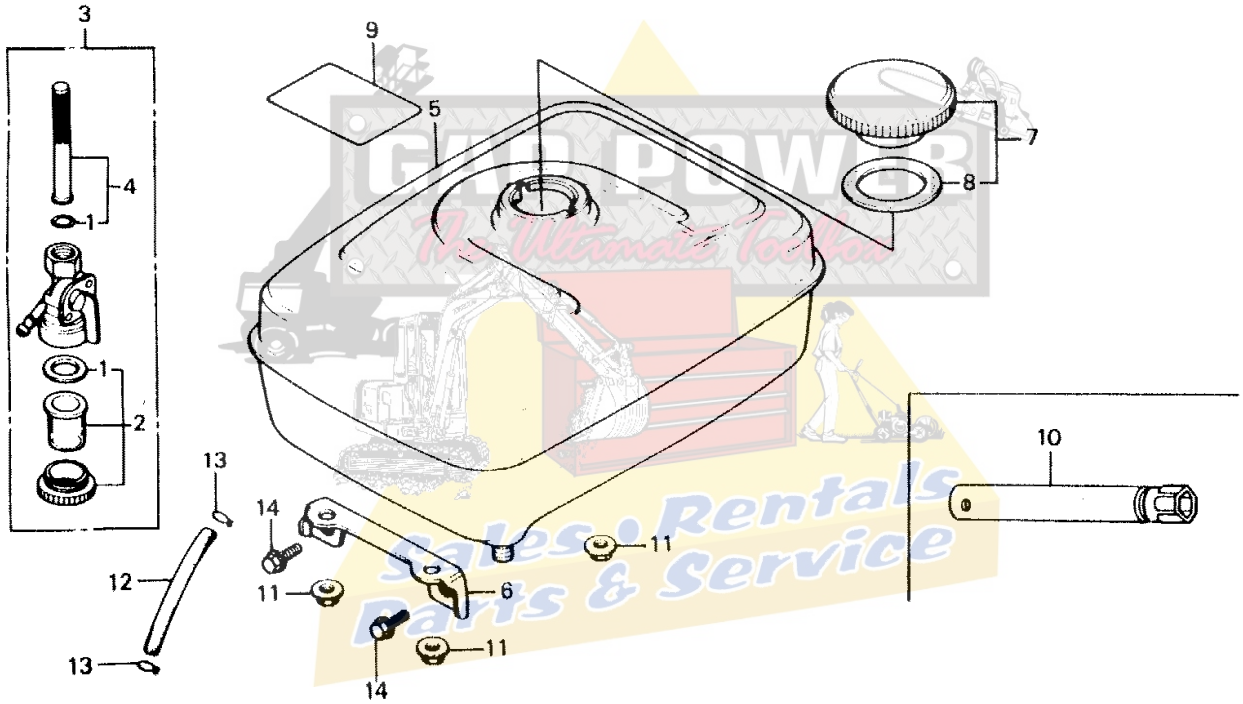
3
9
5
7
4
1
8
1
2
10
13
14
11
12
11
6
13
11
14

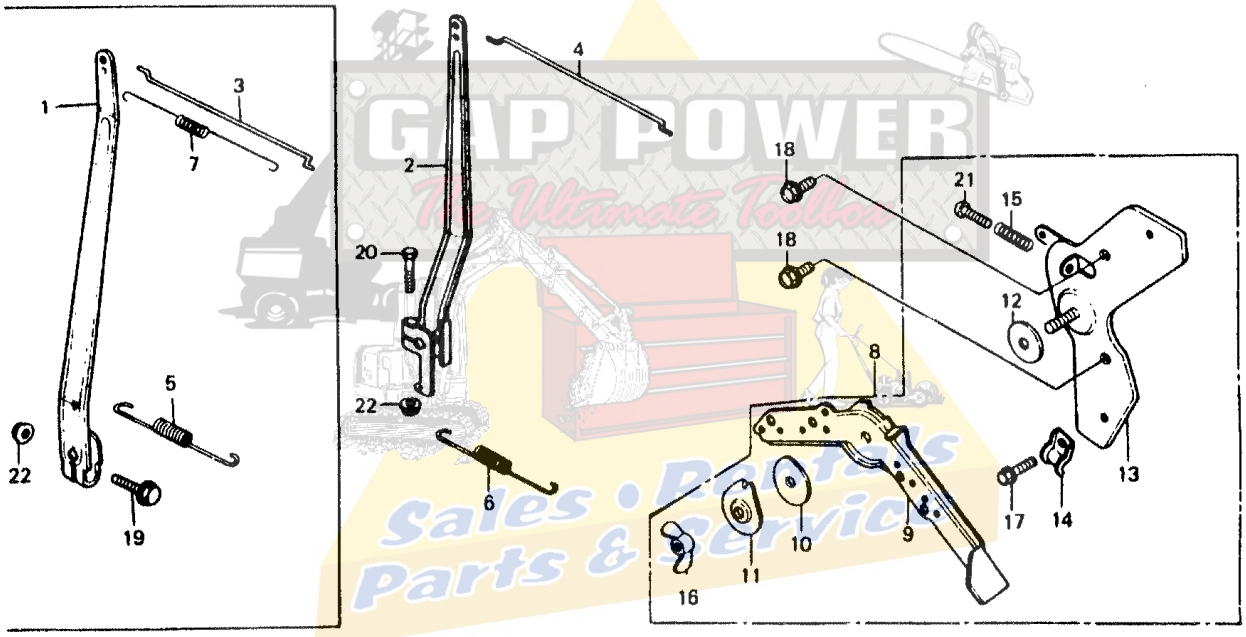


GAP POWER
The Ultimate Toolbox
Sales • Rentals
Parts & Service

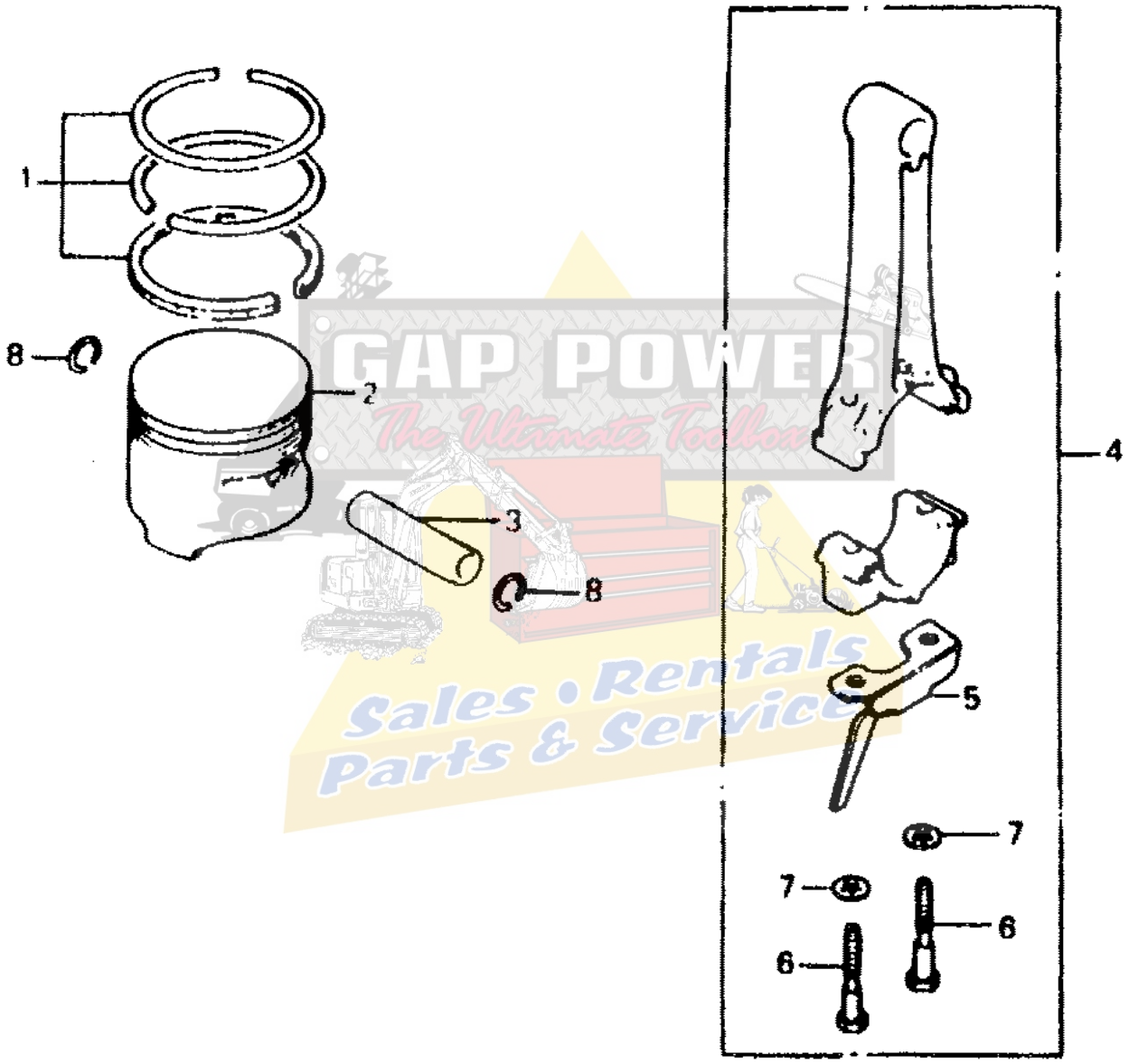


GAP POWER
The Ultimate Toolbox
Sales • Rentals
Parts & Service

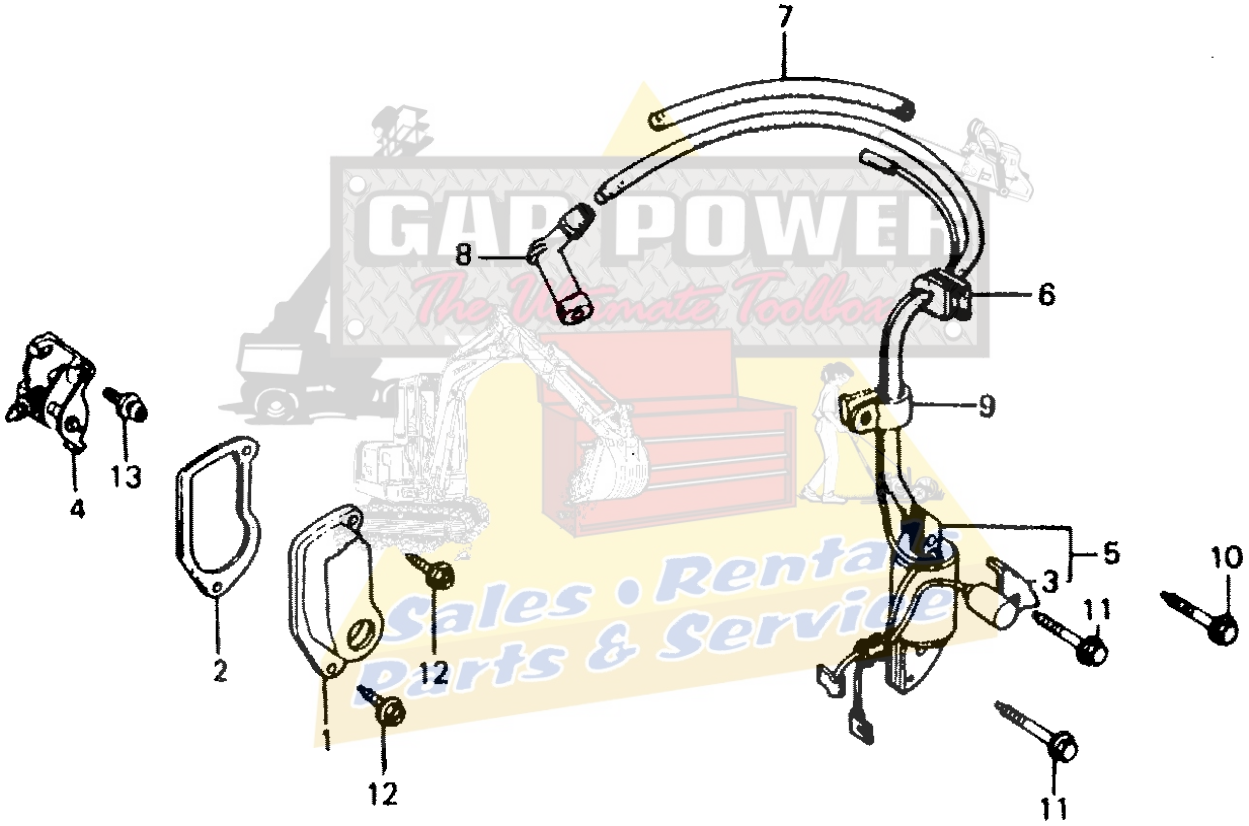
7
8
6
9
5
3
10
11
11
4
13
2
1
12
12

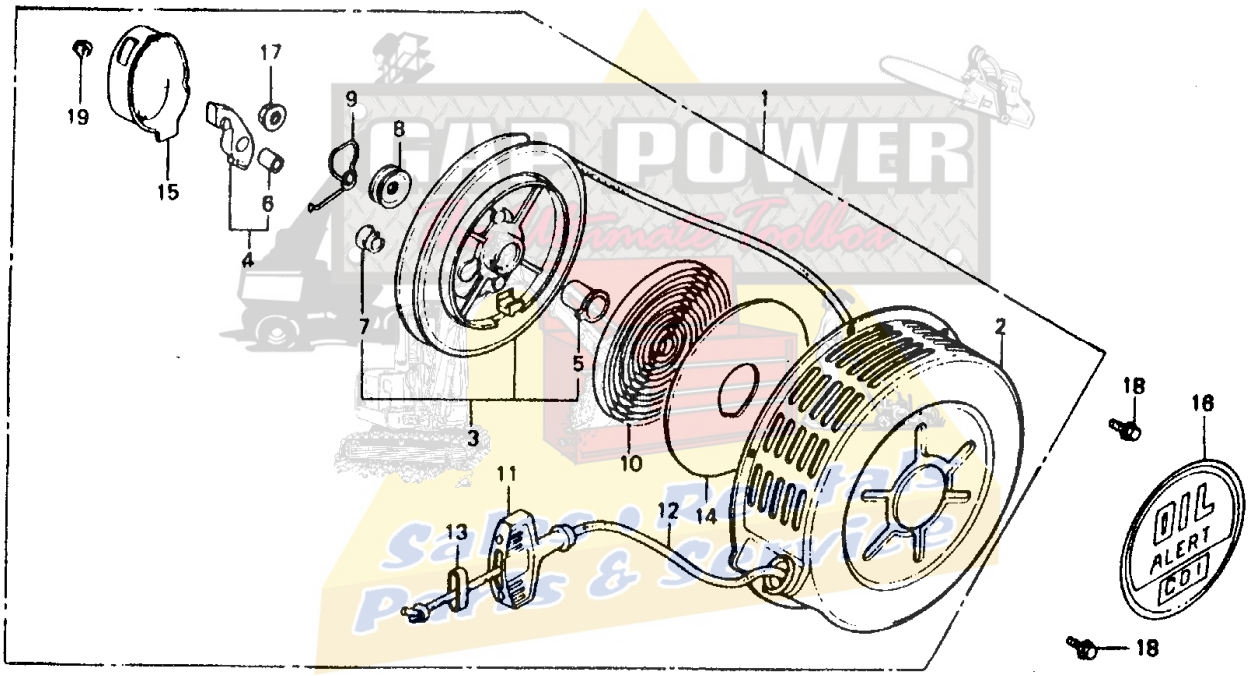
1
2
3
4
5
6
7
8
9
10
11
12
13
14
15
16
17
18
18
19
OIL
ALERT

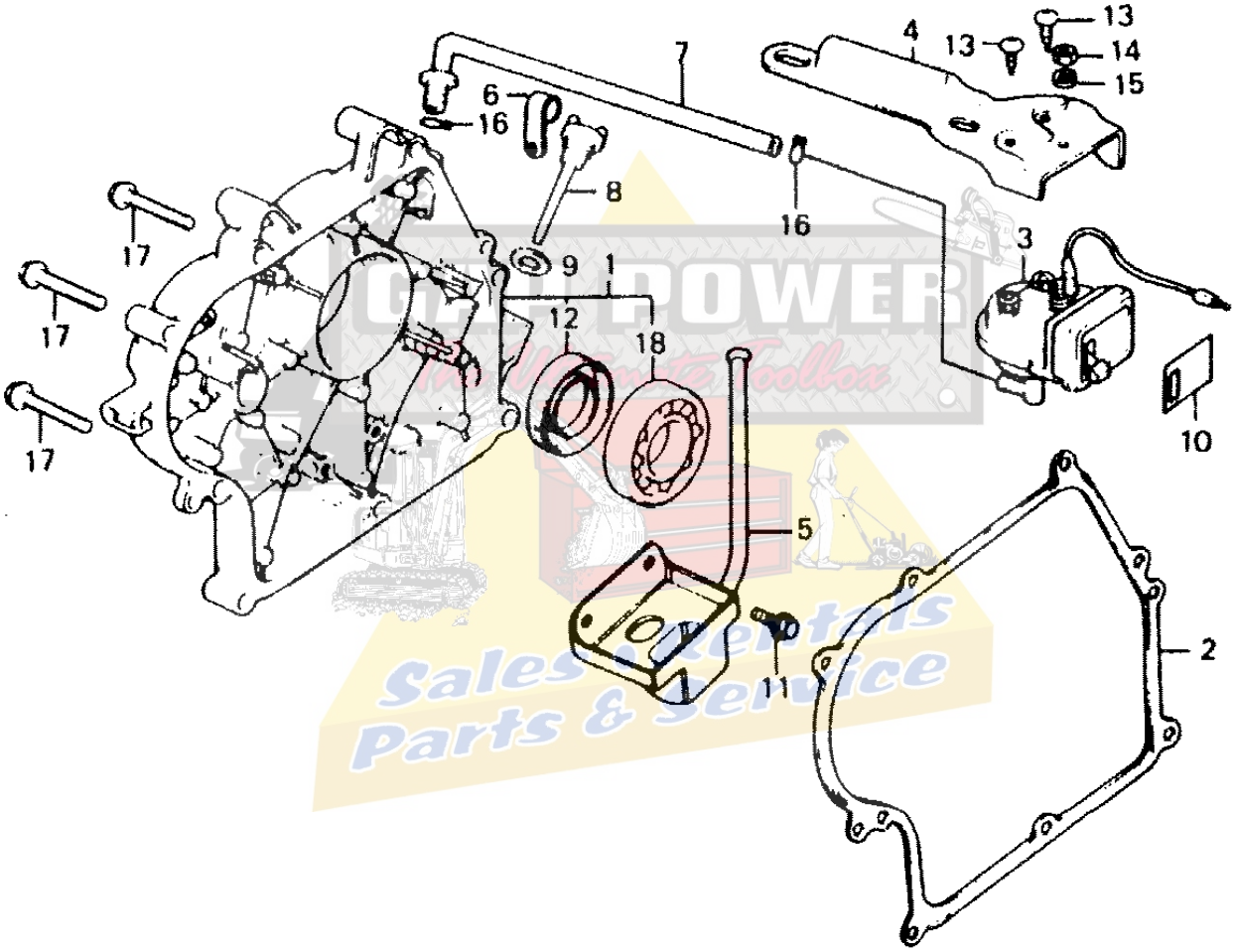
13
4
13
14
15
7
6
16
8
16
3
17
9
1
17
12
18
10
17
5
2
11

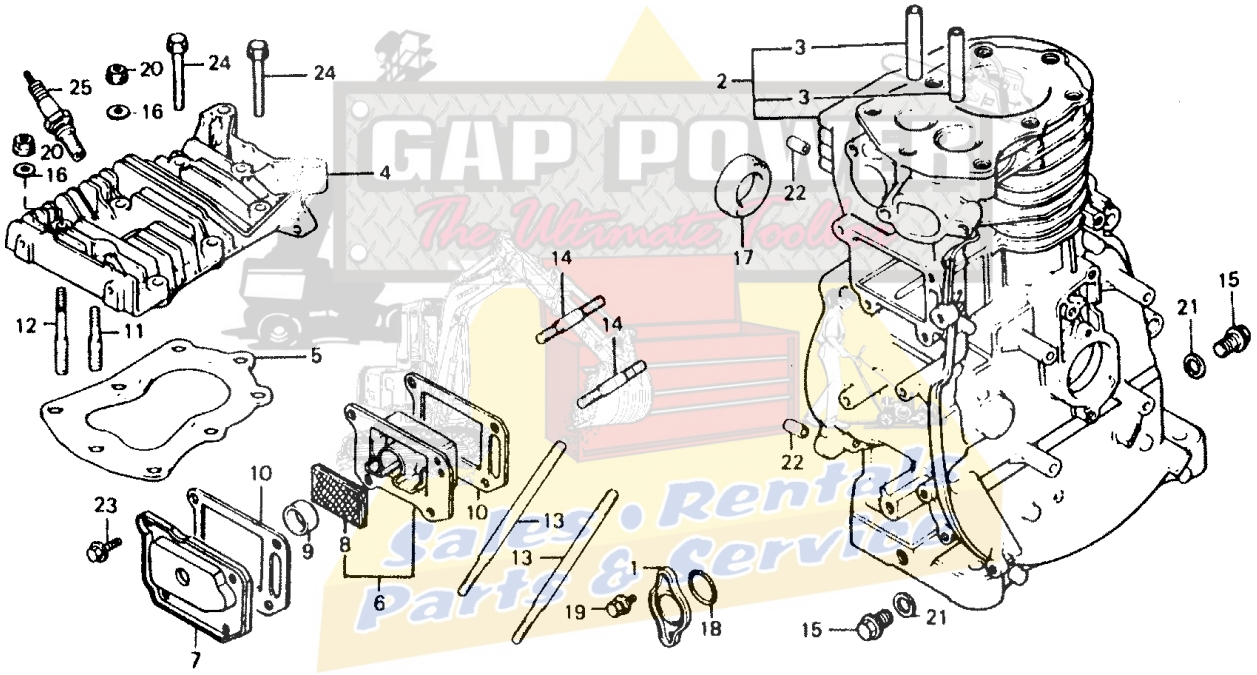
25
20
24
24
16
20
16
4
12
11
5
23
10
9
8
6
7
10
13
13
14
14
1
19
18
3
2
3
22
17
22
15
21
15
21

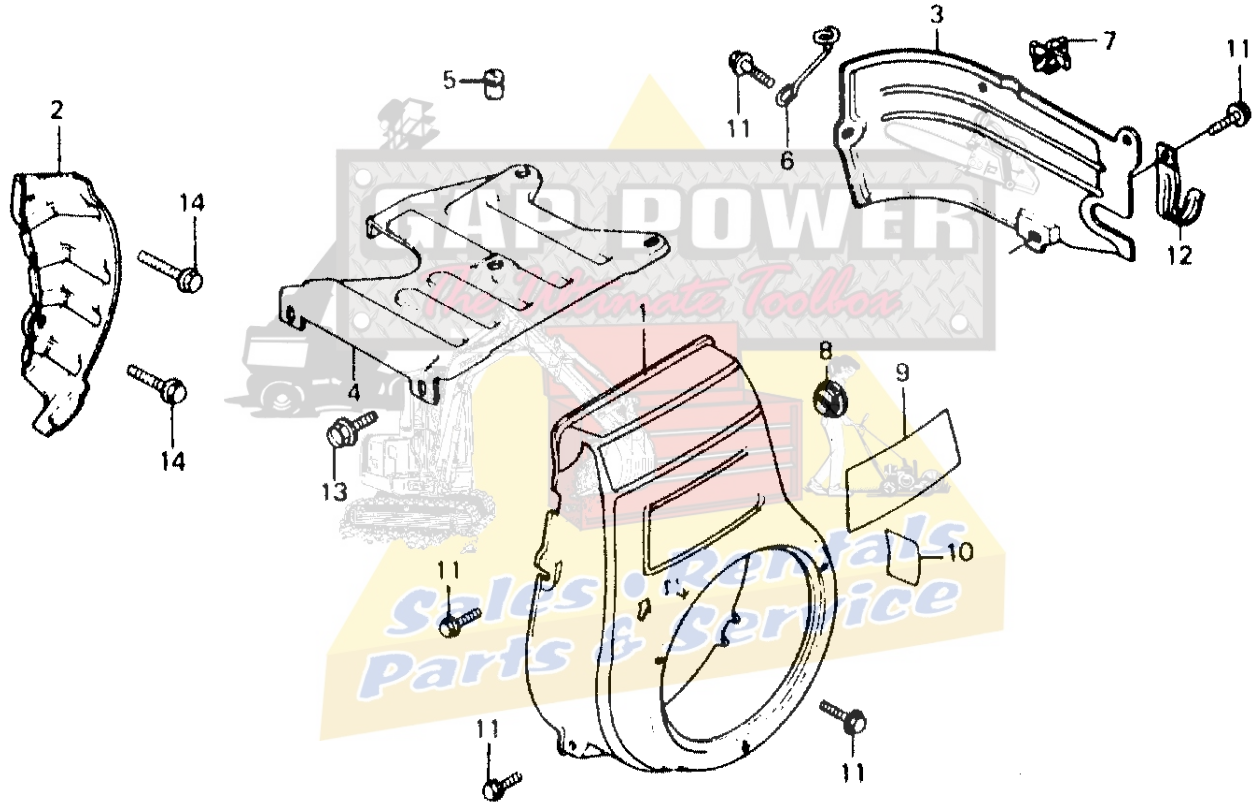
2
14
14
5
4
13
11
6
3
7
11
12
1
8
9
10
11
11
11

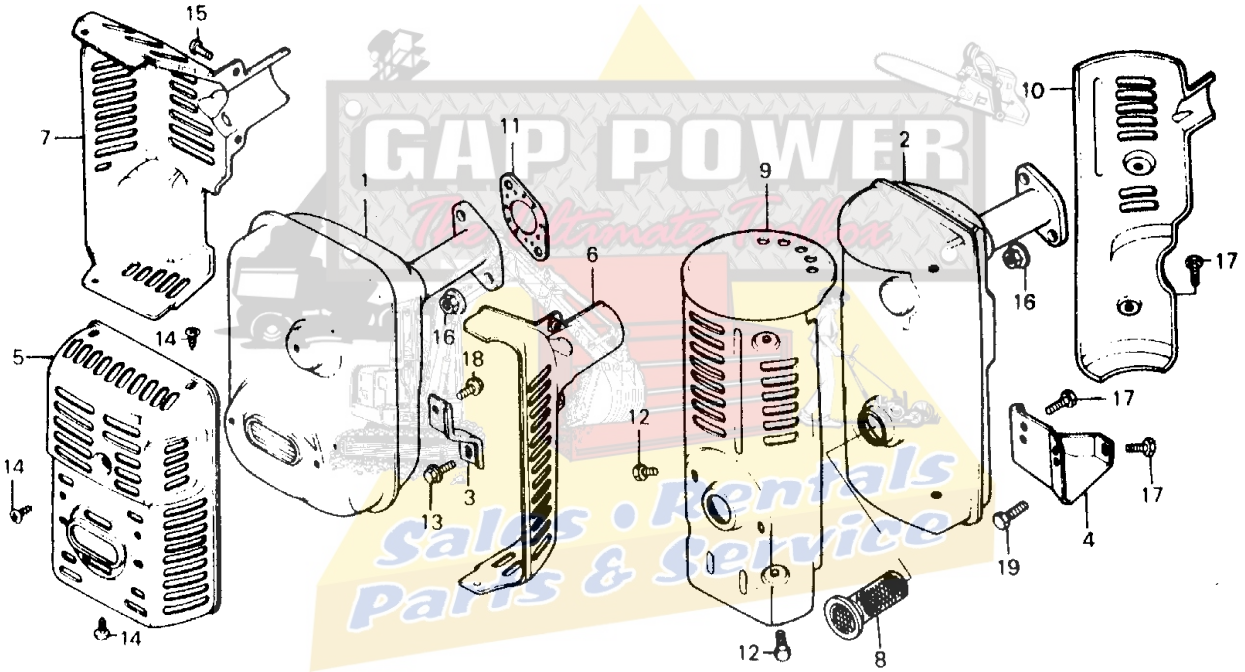


GAP POWER
The Ultimate Tool
Sales • Rentals
Parts & Service