Click Here To View Item at www.GapPower.com

GAP POWER
The Ultimate Toolbox
Sales • Rentals
Parts & Service

Illustrated Parts Manual

MODELS 1930ES, 2030ES, 2630ES, 2646ES & 3246ES

S/N 0200198014 TO PRESENT & S/N B200000100 TO PRESENT

3121275

April 15, 2013

ANSI

CE

An Oshkosh Corporation Company

REVISION LOG

NOTE: Country of Manufacture - The ES Scissor Lifts are manufactured by JLG Industries in the following countries: USA, Belgium or China. Refer to the Serial Number Tag to identify the country of manufacture. ES Scissors manufactured in the USA will have a serial number prefix of 02 (i.e. 02XXXXXXXX), ES Scissors manufactured in Belgium will have a prefix of 12 (i.e. 12XXXXXXXX) and ES Scissors manufactured in the China will have a serial number prefix of B2 (i.e. B2XXXXXXXX).

NOTE: 1930ES, 2030ES, 2630ES, 2646ES & 3246ES Global Illustrated Parts Manual P/N 3121167 has been replaced by multiple manuals. Review machine S/N and use the Global Illustrated Parts Manual for the correct serial number range:
USA Built Machines Prior to S/N 0200135154 — Use manual p/n 3121246.
USA Built Machines S/N 0200135154 to S/N 0200152825 — Use manual p/n 3121247.
USA Built Machines S/N 0200152825 to S/N 0200198014 — Use manual p/n 3121248.
USA Built Machines S/N 0200198014 to Present — Use manual p/n 3121275.
Belgium Built Machines Prior to S/N 1200004293 — Use manual p/n 3121246.
Belgium Built Machines S/N 1200004293 to S/N 1200008481— Use manual p/n 3121247.
Belgium Built Machines S/N 1200008481 to Present — Use manual p/n 3121248.
China Built Machines S/N B200000100 to Present — Use manual p/n 3121275.

NOTE: Drive Module Identification - The module is located inside a compartment on the frame behind the front drive wheels. Remove the cover and identify the drive module by part number or visual identification (See illustration below). Also, identify the country of manufactured by referring to the S/N nameplate before ordering parts (See note above).

USA built machines: All machines built before to S/N 0200198014 use the 1600346 Drive Module. All Machines built S/N 0200198014 to present machines use the 001092456 Drive Module.

Belgium built machines: All machines use the 1600346 Drive Module.

China built machines: All machines use the 1001092456 Drive Module.

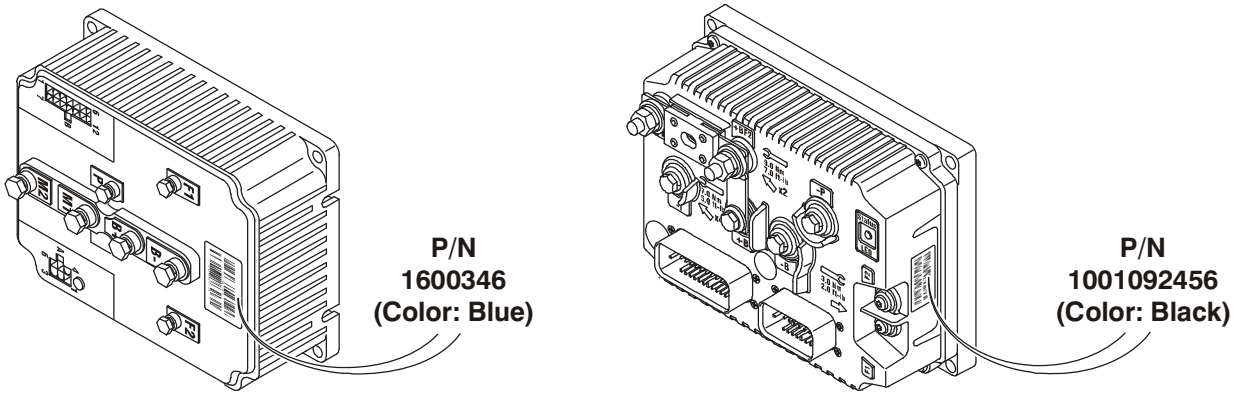

July 22, 2011 - Original Issue of Manual (Edited B/M 0010588 Revision B)

October 7, 2011 - Revised Manual (Edited B/M 0010588 Revision C)

January 10, 2012 - Revised Manual (Edited B/M 0010588 Revision D)

June 20, 2012 - Revised Manual (Edited B/M 0010588 Revision H)

August 23, 2012 - Revised Manual (Edited B/M 0010588 Revision H)

January 10, 2013 - Revised Manual (Edited B/M 0010588 Revision H)

April 15, 2013 - Revised Manual (Edited B/M 0010588 Revision H)

REVISION LOG

TABLE OF CONTENTS

FIGURE NO.	TITLE	PAGE NO.
SECTION 1 - FRAME		**1-1**
1-1	STEERING, DRIVE AND REAR AXLE INSTALLATIONS	1-2
1-2	WHEEL DRIVE ASSEMBLY	1-6
1-3	DRIVE MODULE & OTHER FRAME MOUNTED COMPONENTS	1-12
1-4	POTHOLE PROTECTION INSTALLATION (1930ES/2030ES/2630ES)	1-16
1-5	POTHOLE PROTECTION INSTALLATION (2646ES/3246ES)	1-18
1-6	BATTERY CHARGER ASSEMBLY AND INSTALLATION (DELTA-Q CHARGER)	1-20
1-7	BATTERY CHARGER WITH INVERTER ASSEMBLY AND INSTALLATION (OPTIONAL ON ANSI & CSA SPEC MACHINES)	1-24
1-8	LADDERS, BEACON LIGHT & ROTARY SENSOR COVER INSTALLATION	1-26
SECTION 2 - GROUND COMPONENTS		**2-1**
2-1	BATTERIES AND COVERS INSTALLATION	2-2
2-2	GROUND CONTROL ASSEMBLY & INSTALLATION	2-6
2-3	BRAKE DISCONNECT/RELEASE & MDI (MULTIFUNCTION DIGITAL INDICATOR) GAUGE INSTALLATIONS	2-10
SECTION 3 - SCISSOR ARMS		**3-1**
3-1	SCISSOR ARMS INSTALLATION - 1930ES	3-2
3-2	SCISSOR ARMS INSTALLATION - 2030ES	3-6
3-3	SCISSOR ARMS INSTALLATION - 2630ES	3-10
3-4	SCISSOR ARMS INSTALLATION - 2646ES/3246ES	3-14
SECTION 4 - PLATFORM		**4-1**
4-1	PLATFORM INSTALLATION	4-2
4-2	RAIL (FIXED) INSTALLATION - 1930ES	4-6
4-3	RAIL (FOLD-DOWN) INSTALLATION - 1930ES	4-10
4-4	RAIL INSTALLATION - 2030ES/2630ES	4-14
4-5	RAIL INSTALLATION - 2646ES/3246ES	4-18
4-6	PLATFORM CONSOLE BOX INSTALLATION	4-22
4-7	DRIVE/STEER CONTROLLER ASSEMBLY	4-26
SECTION 5 - CYLINDER		**5-1**
5-1	LIFT CYLINDER ASSEMBLY	5-2
5-2	STEER CYLINDER ASSEMBLY	5-8
SECTION 6 - HYDRAULIC		**6-1**
6-1	HYDRAULIC DIAGRAM	6-2
SECTION 7 - ELECTRICAL		**7-1**
7-1	ELECTRICAL SCHEMATIC	7-2
7-2	1930ES ELECTRICAL COMPONENTS INSTALLATION	7-8
7-3	2030ES/2630ES ELECTRICAL COMPONENTS INSTALLATION	7-20
7-4	2646ES/3246ES ELECTRICAL COMPONENTS INSTALLATION	7-32

TABLE OF CONTENTS

FIGURE NO.	TITLE	PAGE NO.
SECTION 8 - DECALS		**8-1**
8-1	DECAL INSTALLATION (ANSI SPEC)	8-2
8-2	DECALS INSTALLATIONS (ANSI EXPORT SPEC)	8-8
8-3	DECAL INSTALLATION (AUSTRALIAN, CE & JAPANESE SPECS)	8-14
SECTION 9 - RECOMMENDED SERVICE PARTS STOCK		**9-1**
SECTION 10 - SPECIAL OPTIONS		**10-1**
SECTION 11 - PART NUMBER INDEX		**11-1**

SECTION 1
FRAME

FIGURE 1-1. STEERING, DRIVE AND REAR AXLE INSTALLATIONS

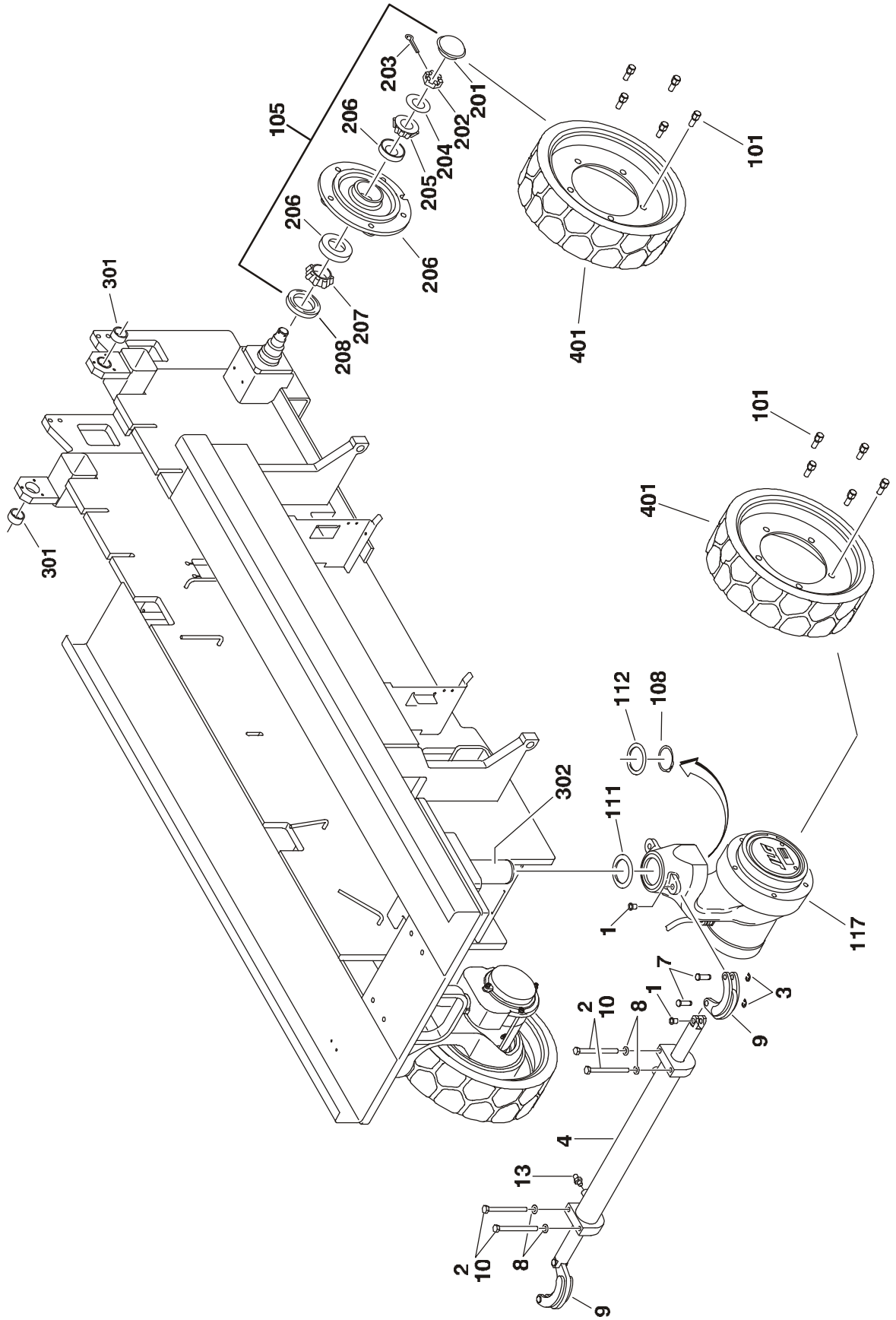

FIGURE 1-1. STEERING, DRIVE AND REAR AXLE INSTALLATIONS

ITEM #	PART NUMBER	QTY.	DESCRIPTION	REV.
		Ref.	**STEERING INSTALLATION**	
	0272371	Ref.	**1930ES**	G
	0273227	Ref.	**2030ES/2630ES**	D
	0274546	Ref.	**2646ES/3246ES**	B
1	0440259	2	Bearing, Flanged	
2		4	Bolt M10 Options:	
	0701016		40mm Length	
	0701020		60mm Length	
3	1380153	4	E-Clip	
4		1	Steer Cylinder Assembly (See Section 5 for Breakdown):	
	1684237		1930ES/2030ES/2630ES	
	1684456		2646ES/3246ES	
5 to 6	Not Used			
7	3423037	4	Pin, Clevis	
8	4812000	4	Flatwasher M10	
9	4846757	2	Lug, Steer	
10	0100011	A/R	Compound, Locking	
11 to 12	Not Used			
13	2110404	2	Fitting, Straight	
		Ref.	**DRIVE INSTALLATION**	
	1001117032	Ref.	**1930ES**	A
	1001114882	Ref.	**2030ES/2630ES**	C
	1001117033	Ref.	**2646ES/3246ES**	B
101	0630580	20	Bolt, Wheel	
102 to 104	Not Used			
105	2780266	2	Hub Assembly (See Items 201-208 for Breakdown)	
106 to 107	Not Used			
108	3760463	2	Ring, Retaining	
109 to 110	Not Used			
111	4740524	2	Thrustwasher M60	
112	4740564	2	Washer, Spindle Retaining	
113 to 116	Not Used			
117		2	Wheel Drive Assembly Options (See Figure 1-2 for Breakdown):	
	1001092737		1930ES	
	1001092738		2030ES/2630ES/2646ES/3246ES	
	1001092738		2646ES/3246ES	
	2780266	Ref.	**HUB ASSEMBLY**	D
		Ref.	**Note: Qtys shown for 1 Assembly. Two Assemblies required per machine.**	
201	Use 1001102354	1	Cap, Dust (was p/n 7012524)	
202	Use 3300423	1	Nut, Slotted (was p/n 7010641)	
203	Use 3450406	1	Pin, Cotter 2” x 3/16” (was p/n 7010642)	
204	Use 4740468	1	Washer (was p/n 7019697)	
205	Use 1001102351	1	Bearing, Cone - Outer (was p/n 7026185)	

FIGURE 1-1. STEERING, DRIVE AND REAR AXLE INSTALLATIONS (CONTINUED)

ITEM #	PART NUMBER	QTY.	DESCRIPTION	REV.
206	Not Available	1	Hub (Purchase Complete Hub p/n 2780266)	
207	Use 1001102353	1	Bearing, Cone - Inner (was p/n 7026183)	
208	Use 1001102349	1	Seal (was p/n 7026184)	
		Ref.	**FRAME WELDMENTS**	
301		2	Bushing Options:	
	0440264		1930ES	
	0440265		2030ES/2630ES/2646ES/3246ES	
302		A/R	Kingpin Rework Instruction Options (Provides rework procedure for damaged kingpins):	
	3128601		1930ES/2030ES/2630ES	
	3128703		2646ES/3246ES	
		Ref.	**TIRE & WHEEL INSTALLATION**	
	0010588	Ref.	**1930ES USA Built Machines S/N 0200198014 to Present & China Built Machines S/N B200000100 to Present**	
	0010588	Ref.	**2030ES/2630ES USA Built Machines S/N 0200198014 to Present & China Built Machines S/N B200000100 to Present**	
	0010588	Ref.	**2646ES/3246ES USA Built Machines S/N 0200198014 to Present & China Built Machines S/N B200000100 to Present**	
401		A/R	Tire and Wheel Assembly Options:	
		Ref.	**Note: Must replace Tire & Wheel Assy's in pairs per axle.**	
	Use 2915012	4	1930ES (was p/n 4520565, 1001100840 & 1001114467)	
	Use 2915013	4	2030ES/2630ES/2646ES/3246ES (was p/n 4520676, 1001100894 & 1001114466)	

FIGURE 1-1. STEERING, DRIVE AND REAR AXLE INSTALLATIONS (CONTINUED)

ITEM #	PART NUMBER	QTY.	DESCRIPTION	REV.

FIGURE 1-2.WHEEL DRIVE ASSEMBLY

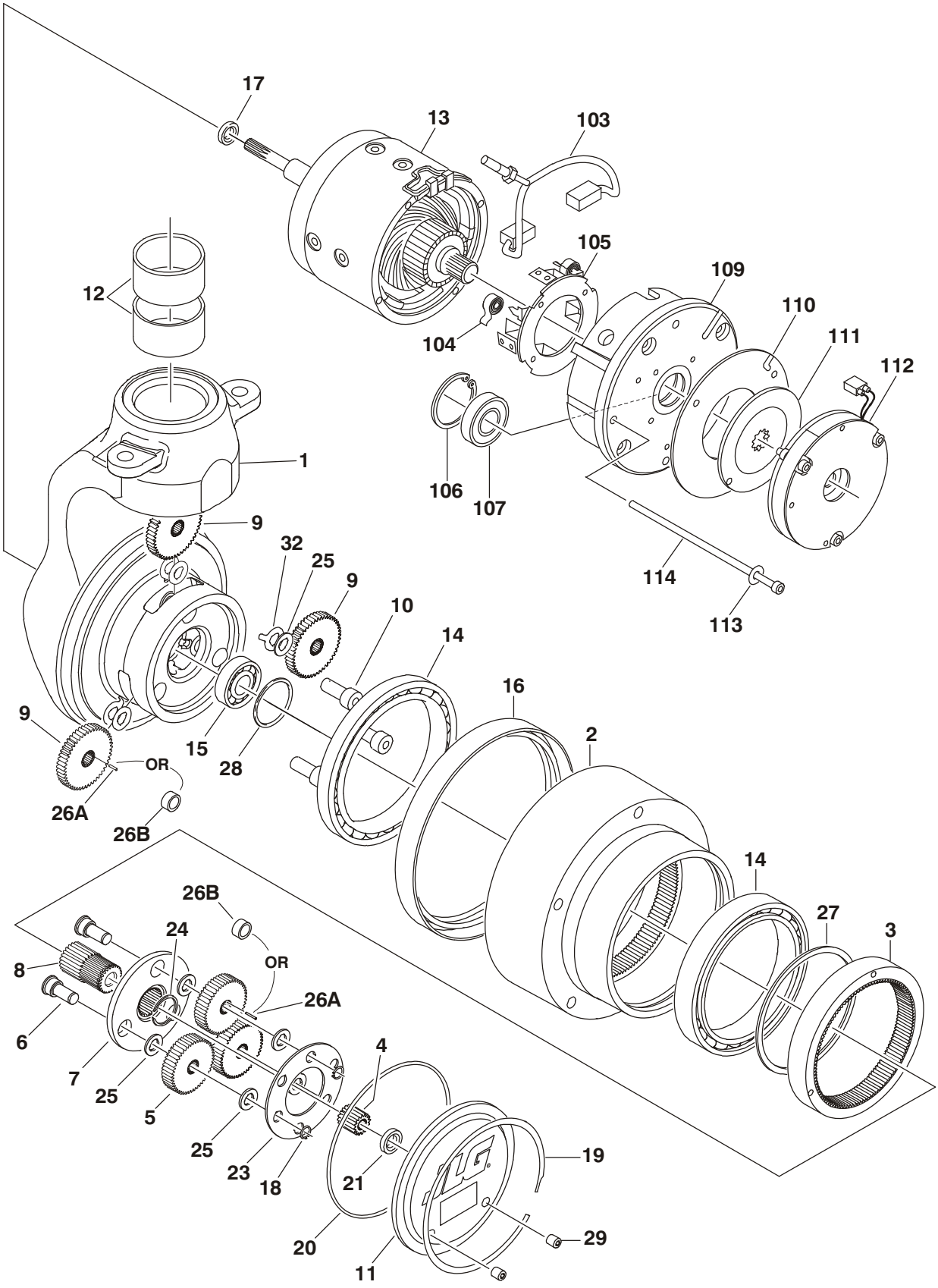

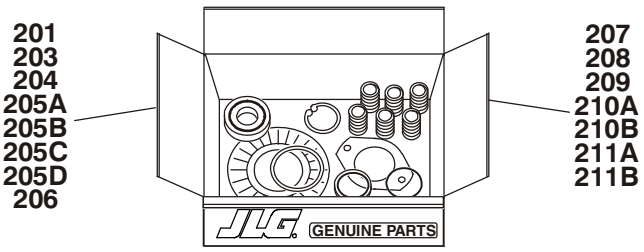
201
203
204
205A
205B
205C
205D
206
207
208
209
210A
210B
211A
211B
JLG
GENUINE PARTS

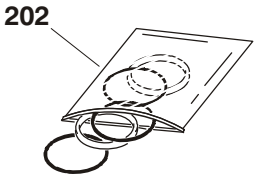
202

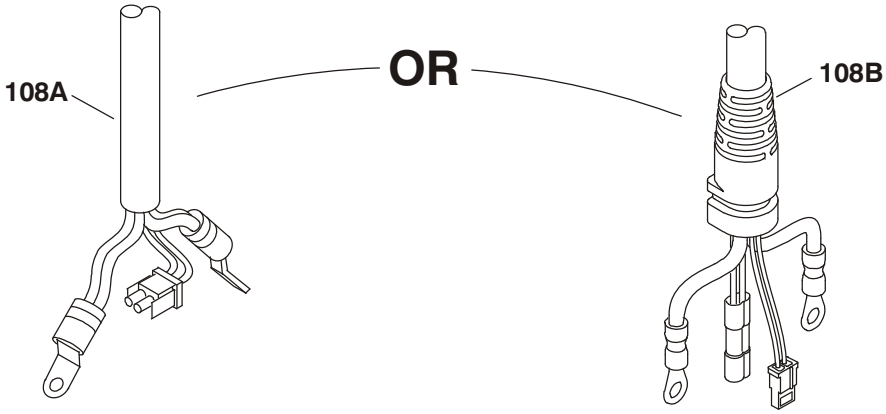
108A
OR
108B

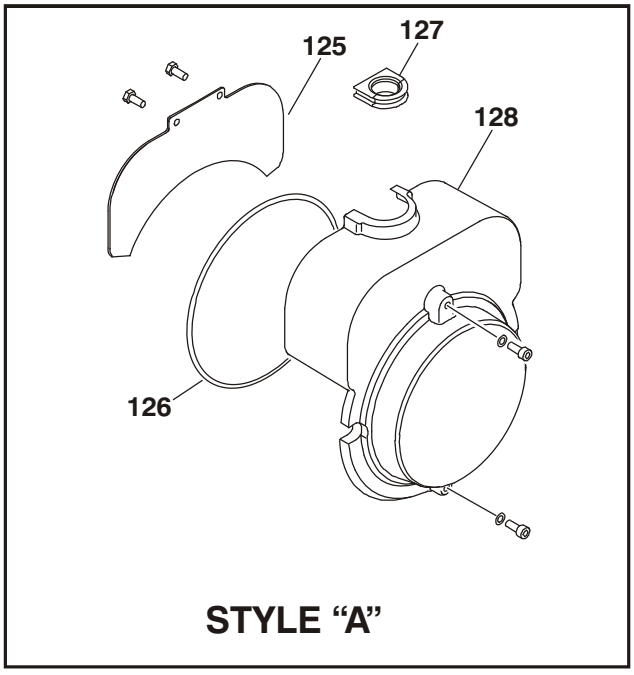
125
127
128
126
STYLE “A”

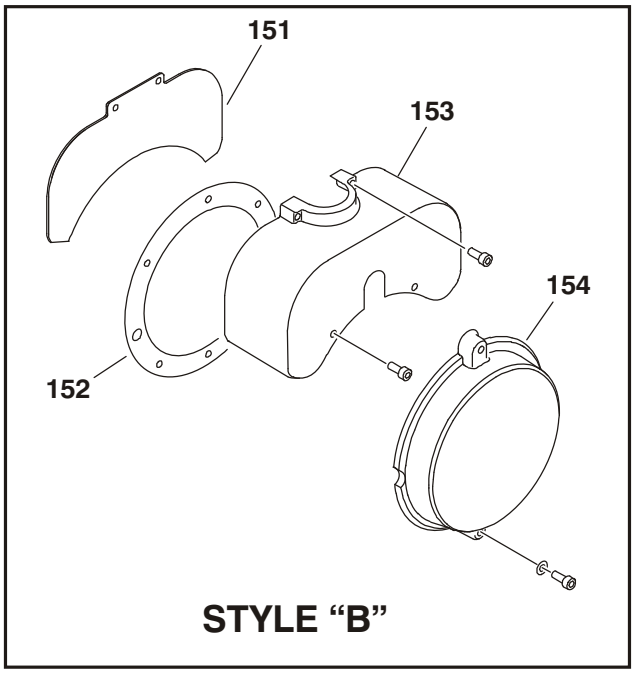
151
153
154
152
STYLE “B”

FIGURE 1-2. WHEEL DRIVE ASSEMBLY

ITEM #	PART NUMBER	QTY.	DESCRIPTION	REV.
		Ref.	**WHEEL DRIVE ASSEMBLY (ADVANCED)**	
	1001092737	Ref.	**1930ES**	G
	1001092738	Ref.	**2030ES/2630ES/2646ES/3246ES**	I
		Ref.	**Note: Due to service updates, drive motors may use any of the various parts listed below. Visual identification will be required.**	
		Ref.	**HUB ASSEMBLY**	
1	Not Available	1	Spindle	
2	Use Item 206	1	Hub	
3	Use Item 204	1	Ring, Input	
4	Use Item 203	1	Gear, Input Sun	
5	Use Item 203	3	Gear, Input Planet	
6	Use Item 203	3	Pin, Planet Gear	
7	Use Item 203	1	Carrier	
8	Use Item 203	1	Gear, Output Sun	
9	Use Item 207	3	Gear, Output Planet	
10	Use Item 207	3	Pin, Output Planet	
11	Use Item 201	1	Cover	
12	7024757	1	Bushing Kit, Kingpin (Includes 2 Bushings)	
13	See Note	1	Motor, Electric **(Note: Use item 205A, 205B, 205C or 205D)**	
14	See Note	2	Bearing, Main **(Note: Use Item 202, 204, 206 or 207)**	
15	Use Item 207	1	Bearing, Shaft	
16	70001739	1	Seal, Lip	
17	7024786	1	Seal, Lip	
18	Use Item 203	3	Ring, Retaining	
19	Use Item 201	1	Ring, Retaining	
20	70000191	1	O-Ring	
21	Use Item 201	1	Thrustwasher	
22	Not Used			
23	Use Item 203	1	Plate, Thrust	
24	Use Item 203	1	Ring, Retaining	
25	See Note	9	Thrustwasher **(Note: Use Item 203 or 207)**	
26	See Note	A/R	Bearing/Bushing Options **(Note: Use Item 203 or 207):**	
26A		66	Bearing, Needle	
26B		6	Bushing	
27	See Note	1	Ring, Retaining **(Note: Use Item 204, 206 or 207)**	
28	Use Item 207	1	Ring, Retaining	
29	Use Item 201	2	Plug	
30 to 31	Not Used			
32	Use Item 207	3	Washer, Tanged	
		Ref.	**BRAKE & MOTOR COMPONENTS**	
101 to 102	Not Used			
103	Use Item 208	1	Brush & Terminal Assembly	
104	70000790	2	Spring, Brush	
105	70000791	1	Box, Brush	
106	Use Item 208	1	Ring, Retaining	

FIGURE 1-2. WHEEL DRIVE ASSEMBLY (CONTINUED)

ITEM #	PART NUMBER	QTY.	DESCRIPTION	REV.
107	Use Item 208	1	Bearing	
108		1	Harness, Electrical Cable Options:	
108A	Use 1001099628		1930ES (was p/n 7024770)	
	Use 1001099676		2030ES/2630ES/2646ES/3246ES (was p/n 7024770 & 7024775)	
108B	1001091502		1930ES	
	Use 1001134012		2030ES/2630ES/2646ES/3246ES USA Built Machines S/N 0200198014 to S/N 0200207814 & China Built Machines S/N B200000100 to S/N B200000242 (was p/n 1001091843)	
	1001132439		2030ES/2630ES/2646ES/3246ES USA Built Machines S/N 0200207814 to Present & China Built Machines S/N B200000242 to Present	
109	70000792	1	Commutator	
110	Use Item 209	1	Disc, Reaction	
111	7024785	1	Disc, Friction	
112	Use Item 209	1	Brake Assembly	
113	See Note	2	Flatwasher **(Note: Use Item 210A or 210B)**	
114	See Note	2	Bolt **(Note: Use Item 210A or 210B)**	
115 to 124	Not Used			
			— — — — — — — — — —	
		Ref.	**Style “A” Brake Cover**	
125	See Note	1	Plate, Cover **(Note: Use Item 211A or 211B)**	
126	See Note	1	O-Ring **(Note: Use Item 210A, 210B, 211A or 211B)**	
127	70000383	1	Connector, Strain Relief	
128	See Note	1	Cover **(Note: Use Item 211A or 211B)**	
129 to 150	Not Used			
			— — — — — — — — — —	
		Ref.	**Style “B” Brake Cover**	
151	See Note	1	Plate, Cover **(Note: Use Item 211A or 211B)**	
152	70001949	1	Gasket, Cover	
153	See Note	1	Cover, Top **(Note: Use Item 211A or 211B)**	
154	See Note	1	Cover, End **(Note: Use Item 211A or 211B)**	
		Ref.	**KIT OPTIONS**	
201	7024747	1	Cover Kit (Includes Items 11,19,20,21 & 29)	
202	7024748	1	Main Seal Kit (Includes Qty 1 of Items 14,16 & 20)	
203	7024749	1	Input Carrier Kit (Includes Items 4-8,18,20 & 23-26)	
204	7024758	1	Input Ring Kit (Includes Item 3,20,27 & Qty 1 of Item 14)	
205		1	Motor Kit Options (Includes Items 13,17,103-114 & 151-154):	
			Motors with Item #108A Style Electrical Cable	
205A	Use 1001100819		1930ES (was p/n 7024774)	
205B	Use 1001100820		2030ES/2630ES/2646ES/3246ES (was p/n 7024777)	
			Motors with Item #108B Style Electrical Cable	
205C	70001263		1930ES	
205D	70001345		2030ES/2630ES/2646ES/3246ES	
206	7024756	1	Hub Kit (Includes Items 2,16,20,27 & Qty 1 of Item 14)	
207	7024750	1	Output Planet Kit (Includes Items 9,10,15,20,25-28,32 & Qty 1 of Item 14)	

FIGURE 1-2. WHEEL DRIVE ASSEMBLY (CONTINUED)

ITEM #	PART NUMBER	QTY.	DESCRIPTION	REV.
208	7024771	1	Motor Brush & Bearing Kit (Includes Items 103, 106 & 107)	
209	7024772	1	Brake Kit (Includes Items 110, 111 & 112)	
210		1	Motor Hardware Kit (Includes 113 & 114)	
210A	7024773		1930ES	
210B	7024776		2030ES/2630ES/2646ES/3246ES	
211		1	Brake Cover Kit Options:	
211A	7024787		Style “A” (Includes Items 125 - 128)	
211B	70001265		Style “B” (Includes Items 151 - 154)	

FIGURE 1-2. WHEEL DRIVE ASSEMBLY (CONTINUED)

ITEM #	PART NUMBER	QTY.	DESCRIPTION	REV.

FIGURE 1-3. DRIVE MODULE & OTHER FRAME MOUNTED COMPONENTS

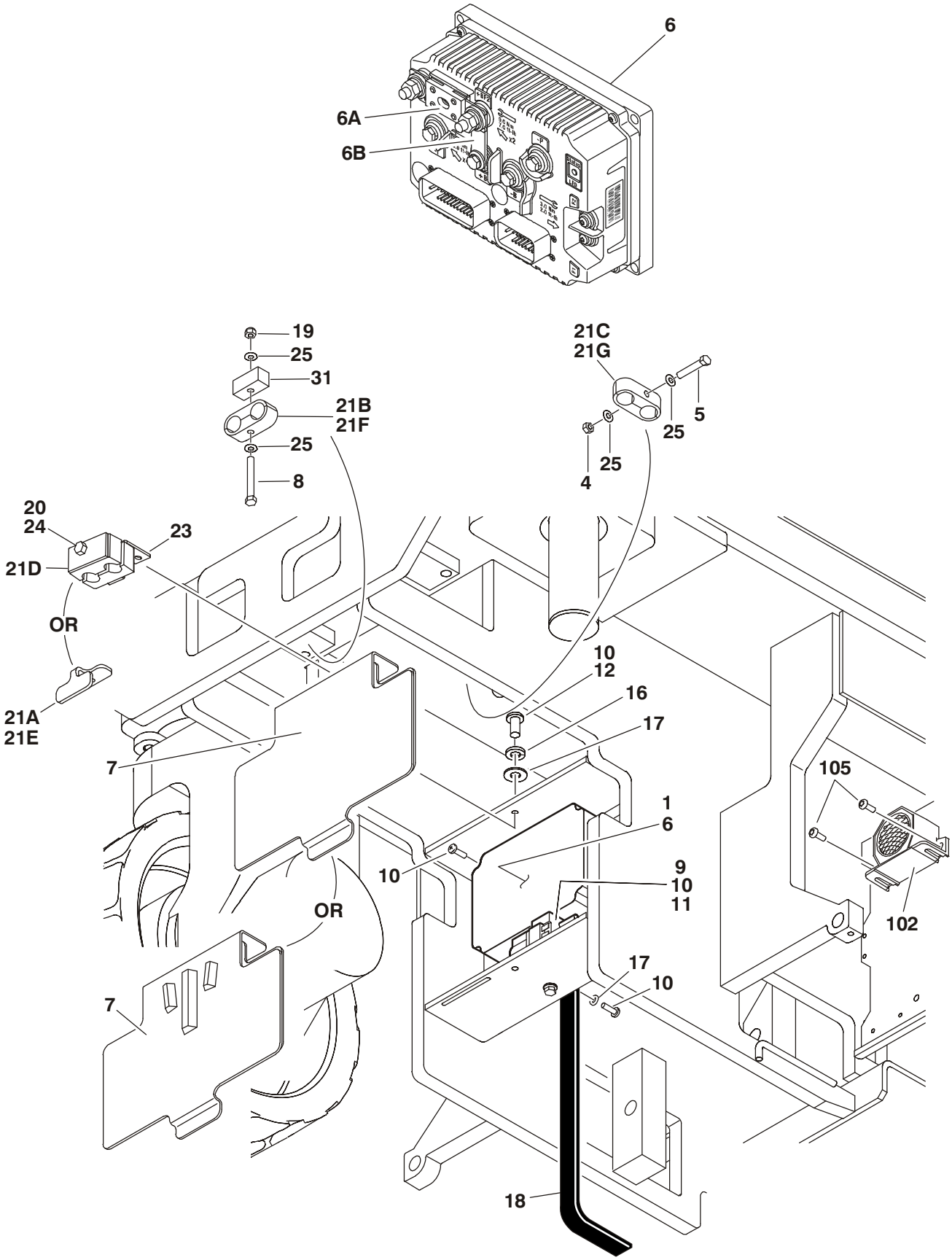

FIGURE 1-3. DRIVE MODULE & OTHER FRAME MOUNTED COMPONENTS

ITEM #	PART NUMBER	QTY.	DESCRIPTION	REV.
		Ref.	**DRIVE MODULE INSTALLATION**	
		Ref.	**1930ES:**	
	1001092739	Ref.	**USA Built Machines**	D
	1001117032	Ref.	**China Built Machines**	A
		Ref.	**2030ES/2630ES:**	
	1001092740	Ref.	**USA Built Machines**	D
	1001114882	Ref.	**China Built Machines**	B
		Ref.	**2646ES/3246ES:**	
	1001092741	Ref.	**USA Built Machines**	D
	1001117033	Ref.	**China Built Machines**	B
1	0100083	A/R	Grease, Heat Transfer	
2 to 3	Not Used			
4	3290605	A/R	Locknut M6	
5	0700619	A/R	Bolt M6 x 55mm	
6	1001092456	1	Module, Drive	
6A	70002683	1	Fuse	
6B	70002682	1	Bussbar	
7		1	Cover Options:	
			1930ES/2030ES/2630ES	
	1671132		USA Built Machines	
	1001115170		China Built Machines	
	1671133		2646ES/3246ES	
8	0700624	A/R	Bolt M6 x 80mm	
9	4191706	A/R	Bolt M6 x 12mm	
10	4191708	A/R	Bolt M6 x 20mm	
11	3740150	1	Relay	
12	4191709	A/R	Bolt M6 x 25mm	
13 to 15	Not Used			
16	4831700	A/R	Lockwasher M6	
17	4751400	A/R	Flatwasher 1/4” Wide	
18	4240147	1	Strap, Anti-Static	
19	3290606	A/R	Locknut M6	
20	0700819	A/R	Bolt M8 x 55mm	
21		A/R	Clamp, Cable Options:	
		Ref.	**Note: Due to service updates, cable clamps may be any of the various designs listed below. Visual identification will be required.**	
			All except UL Spec	
21A	3574714	1	Clamp (Available on All Models)	
21B	1001091492	1	Clamp (Available on 1930ES)	
21C	1001094301	2	Clamp (Available on 2030ES/2630ES/2646ES/3246ES)	
			UL Spec	
21D	1320162	1	Clamp (Available on All Models)	
21E	3574714	1	Clamp (Available on 1930ES)	
21F	1001091492	1	Clamp (Available on 1930ES)	
21G	1001094301	2	Clamp (Available on 2030ES/2630ES/2646ES/3246ES)	
22	Not Used			
23	4340751	A/R	Mount, Cable Clamp (UL Spec Only)	

FIGURE 1-3. DRIVE MODULE & OTHER FRAME MOUNTED COMPONENTS (CONTINUED)

ITEM #	PART NUMBER	QTY.	DESCRIPTION	REV.
24	4811900	A/R	Flatwasher M8	
25	4811700	A/R	Flatwasher M6	
26 to 29	Not Used			
30	4923602	1	Harness, Field Wire Connection (Not Shown - See Section 7 for Breakdown)	
31	1001094124	A/R	Block, Spacer (1930ES With Service Upgrade Only)	
		Ref.	**ALARM INSTALLATIONS**	
	0272810	Ref.	**ANSI & ANSI Export & UL Specs (USA Built Machines)**	F
	1001114885	Ref.	**ANSI & ANSI Export & UL Specs (China Built Machines)**	A
	0273966	Ref.	**ANSI Export & Japanese Specs (USA Built Machines)**	C
	1001114886	Ref.	**ANSI Export & Japanese Specs (China Built Machines)**	A
	0273443	Ref.	**Australian Specs without Overload (USA Built Machines)**	D
	1001114924	Ref.	**Australian Specs without Overload (China Built Machines)**	A
	0272811	Ref.	**Australian & CE Specs with Overload (USA Built Machines)**	F
	1001114925	Ref.	**Australian & CE Specs with Overload (China Built Machines)**	A
	0272722	Ref.	**Descent Alarm**	A
	0272913	Ref.	**Motion Alarm**	A
101	Not Used			
102	0140043	1	Alarm	
103 to 104	Not Used			
105	4191706	2	Screw M6 x 12mm	

FIGURE 1-3. DRIVE MODULE & OTHER FRAME MOUNTED COMPONENTS (CONTINUED)

ITEM #	PART NUMBER	QTY.	DESCRIPTION	REV.

FIGURE 1-4. POTHOLE PROTECTION INSTALLATION (1930ES/2030ES/2630ES)

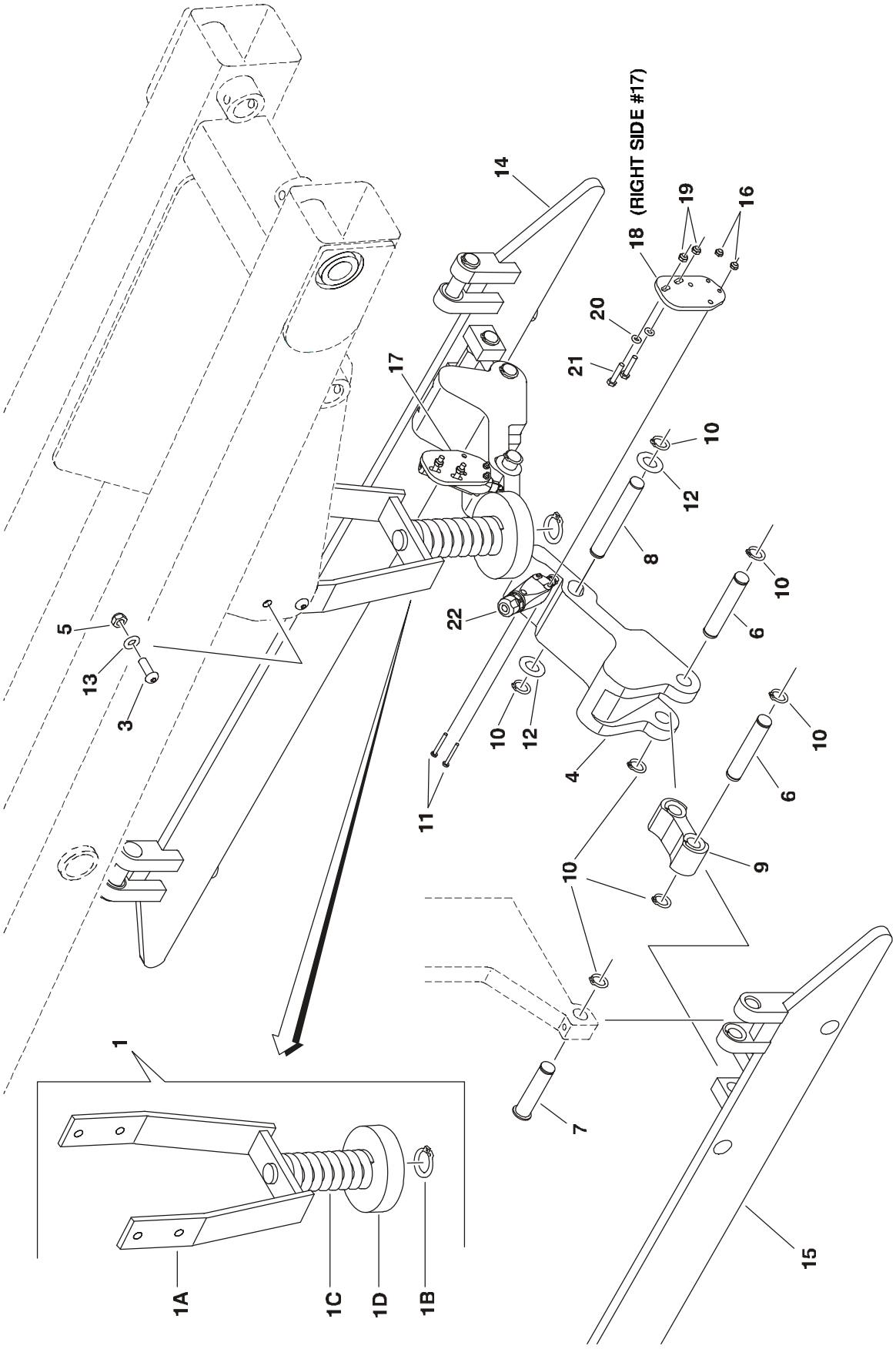

FIGURE 1-4. POTHOLE PROTECTION INSTALLATION (1930ES/2030ES/2630ES)

ITEM #	PART NUMBER	QTY.	DESCRIPTION	REV.
		Ref.	**POTHOLE PROTECTION INSTALLATION**	
		Ref.	**1930ES**	
	1001117265	Ref.	**All Specs except UL Spec**	A
	1001126898	Ref.	**UL Spec**	A
		Ref.	**2030ES/2630ES**	
	1001115173	Ref.	**All Specs except UL Spec**	A
	1001126900	Ref.	**UL Spec**	A
1	Purchase Individual Pieces	1	Actuator Assembly (was p/n 0060090)	A
1A	0060091	1	Actuator Weldment	
1B	3760115	1	Ring, Retaining	
1C	4160202		Spring	
1D	4220287		Pad	
2	Not Used			
3	3900351	4	Screw, Button Head M10 x 30mm	
4	3010158	2	Link	
5	3291005	4	Locknut M10	
6	3423045	4	Pin	
7	3423189	4	Pin	
8	3423267	2	Pin	
9	3574176	2	Link	
	0440263	4	Bushing	
10	3760348	16	Ring, Retaining	
11		4	Screw Options:	
	4010415		Screw M4 x 35mm	
	4031512		Screw M4 x 40mm	
12	4740086	4	Thrustwasher	
13	4812000	4	Flatwasher M10	
14		1	Bar, Pothole Support (Right)	
	4846775		1930ES (Not Shown)	
	4846816		2030ES/2630ES	
	0440263	4	Bushing	
15		1	Bar, Pothole Support (Left)	
	4846861		1930ES (Not Shown)	
	4846863		2030ES/2630ES	
	0440263	4	Bushing	
16	3290405	4	Locknut M4	
17	1001109232	1	Plate, Attach (Right)	
18	1001109233	1	Plate, Attach (Left)	
19	3290605	4	Locknut M6	
20	4811700	4	Flatwasher M6	
21	0700614	4	Screw M6 x 30mm	
22		2	Switch, Limit Options:	
	1001109088		All Specs except UL Spec	
	1001126905		UL Spec	

FIGURE 1-5. POTHOLE PROTECTION INSTALLATION (2646ES/3246ES)

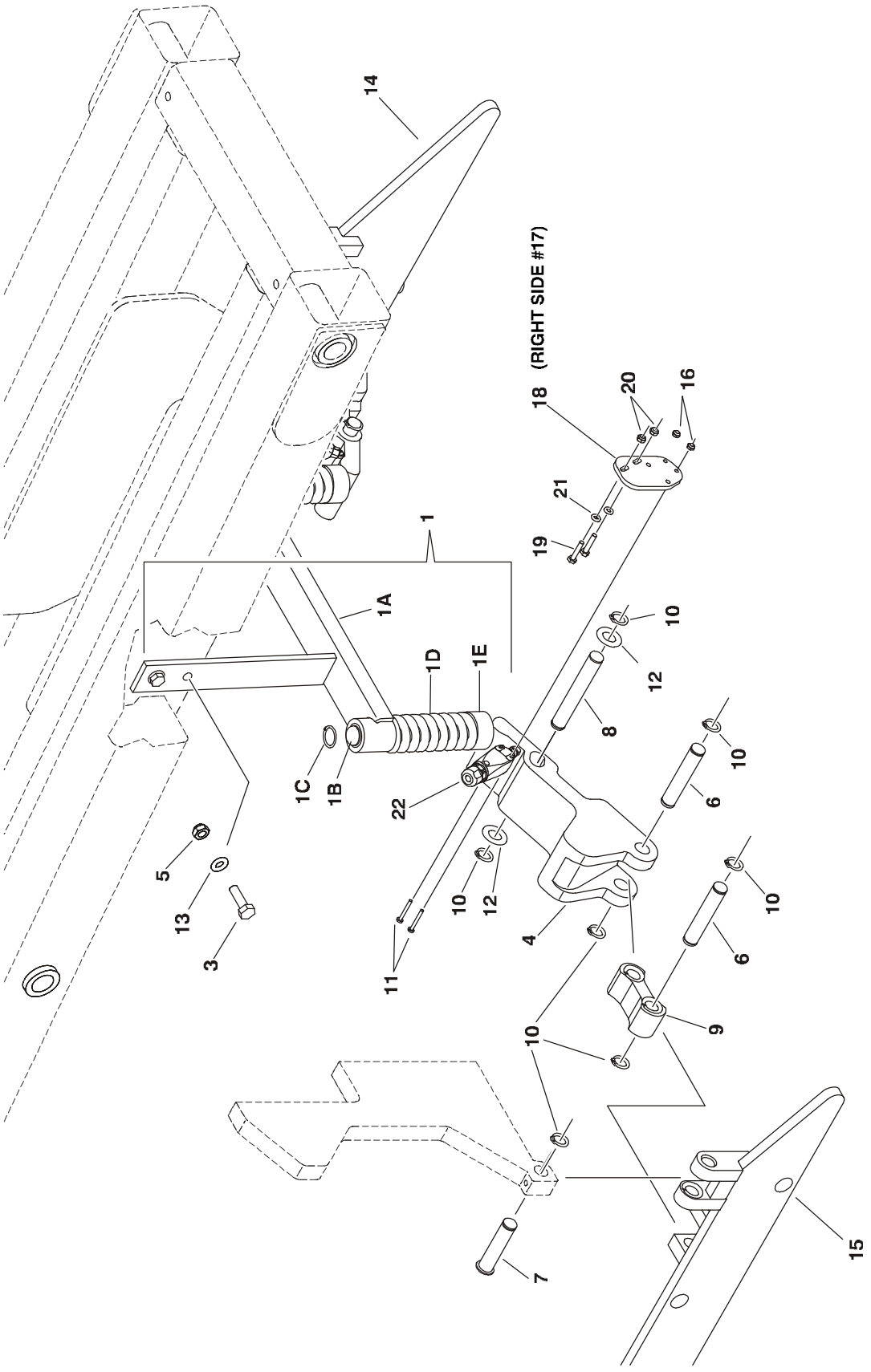

FIGURE 1-5. POTHOLE PROTECTION INSTALLATION (2646ES/3246ES)

ITEM #	PART NUMBER	QTY.	DESCRIPTION	REV.
		Ref.	**POTHOLE PROTECTION INSTALLATION**	
	1001117266	Ref.	**All Specs except UL Spec**	A
	1001126903	Ref.	**UL Spec**	A
1	Purchase Individual Pieces	1	Actuator Assembly (was p/n 0060092)	B
1A	0060093	1	Actuator	
1B	0962292	4	Bushing, Garmax	
1B	3423289	2	Pin	
1C	3760115	2	Ring, Retaining	
1D	4160202	2	Spring	
1E	4220293	2	Pad	
2	Not Used			
3	0701015	4	Screw M10 x 35mm	
4	3010158	2	Link	
5	3291005	4	Locknut M10	
6	3423045	4	Pin	
7	3423189	4	Pin	
8	3423267	2	Pin	
9	3574176	2	Link	
	0440263	4	Bushing	
10	3760348	16	Ring, Retaining	
11		4	Screw Options:	
	4010415		Screw M4 x 35mm	
	4031512		Screw M4 x 40mm	
12	4740086	4	Thrustwasher	
13	4812000	4	Flatwasher M10	
14	4846811	1	Bar, Pothole Support (Right)	
	0440263	4	Bushing	
15	4846862	1	Bar, Pothole Support (Left)	
	0440263	4	Bushing	
16	3290405	4	Locknut M4	
17	1001109232	1	Plate, Attach (Right)	
18	1001109233	1	Plate, Attach (Left)	
19	0700614	4	Screw M6 x 30mm	
20	3290605	4	Locknut M6	
21	4811700	4	Flatwasher M6	
22		2	Switch, Limit Options:	
	1001109088		All Specs except UL Spec	
	1001126905		UL Spec	

FIGURE 1-6. BATTERY CHARGER ASSEMBLY AND INSTALLATION (DELTA-Q CHARGER)

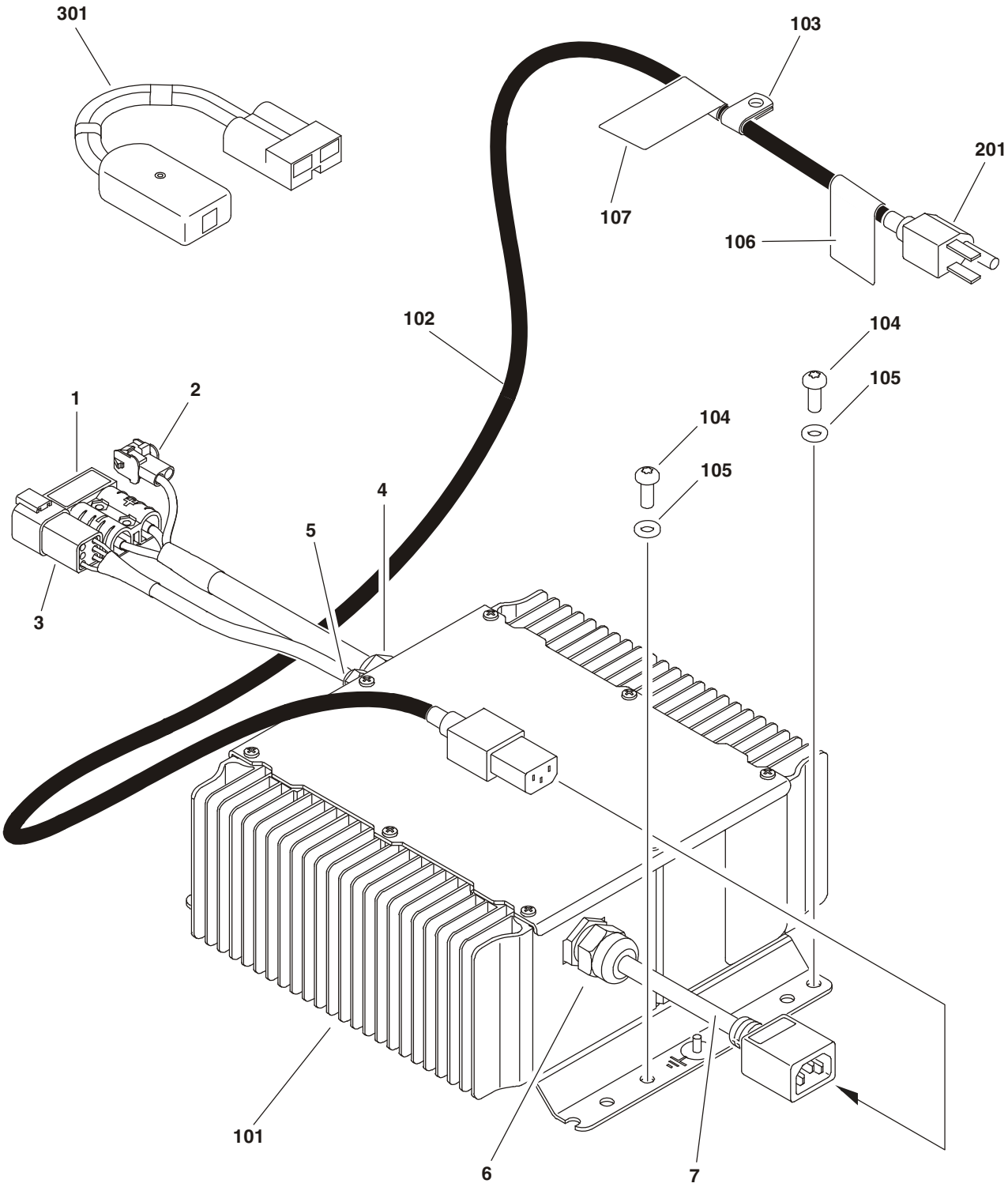

FIGURE 1-6. BATTERY CHARGER ASSEMBLY AND INSTALLATION (DELTA-Q CHARGER)

ITEM #	PART NUMBER	QTY.	DESCRIPTION	REV.
	1001112111	Ref.	**BATTERY CHARGER ASSEMBLY**	F
1	Not Available	1	Harness with Plug	
	4460648	1	Plug, Anderson Battery Cable	
2	Not Available	1	Harness with Connector	
	4460424	1	Connector, Female - 2 Position	
	4460227	2	Pin, Male	
3	Not Available	1	Harness with Connector	
	4460899	1	Connector, Female - 6 Position	
	4460464	6	Pin, Male	
4	Not Available	1	Connector, Strain Relief	
5	Not Available	1	Connector, Strain Relief	
6	Not Available	1	Connector, Strain Relief	
7	Not Available	1	Harness with Connector	
		Ref.	**BATTERY CHARGER INSTALLATION**	
		Ref.	**1930ES:**	
	0275079	Ref.	**AC Cable Has Factory Supplied Plug**	E
	0275088	Ref.	**AC Cable Has Locally Supplied Plug**	E
	1001113574	Ref.	**AC Cable Has Locally Supplied Plug (Australian Spec Only)**	C
		Ref.	**2030ES/2630ES/2630ES/2646ES/3246ES:**	
	0272874	Ref.	**AC Cable Has Factory Supplied Plug**	K
	0272875	Ref.	**AC Cable Has Locally Supplied Plug**	K
	1001113576	Ref.	**AC Cable Has Locally Supplied Plug (Australian Spec Only)**	C
101	1001112111	1	Battery Charger Assembly (See Items 1-7 for Breakdown):	
102		1	Cable, AC Options:	
	1060688		Factory Supplied Plug (Black)	
	1001103257		Factory Supplied Plug (Orange)	
	1060689		Locally Supplied Plug (Black)	
	1001103258		Locally Supplied Plug (Orange)	
103		1	Clamp Options:	
	1320136		Insulated Clamp	
	1321293		Non-Insulated Clamp	
104		2	Screw M6 Options:	
	4191706		12mm Length	
	4191707		16mm Length	
105	4811700	2	Flatwasher M6	
106	1001102258	1	Decal - AC Label (Australian Spec Only)	
107	1001102489	1	Decal - Charger Label (Australian Spec Only)	

FIGURE 1-6. BATTERY CHARGER ASSEMBLY AND INSTALLATION (DELTA-Q CHARGER)

ITEM #	PART NUMBER	QTY.	DESCRIPTION	REV.
201		1	**PLUG OPTIONS:**	
	Not Available	Ref.	**ANSI Spec Plug (Use Item 102 p/n 1060688)**	
	Not Available	Ref.	**Australian & Japanese Specs (Purchase Locally)**	
		Ref.	**CE Spec Options:**	
	0275666	Ref.	**IEC Yellow Receptacle Installation**	A
	4461196		Receptacle, IEC Yellow	
	0275667	Ref.	**IEC Blue Receptacle Installation**	A
	4461199		Receptacle, IEC Blue	
	0275665	Ref.	**AFSINT 107 Keyed Ground Receptacle Installation**	A
	4461249		Receptacle, AFSINT 107 Keyed Ground	
	0275663	Ref.	**CEE 7 Post Ground Receptacle Installation**	A
	4461202		Receptacle, CEE 7 Post Ground	
	0275664	Ref.	**CEE 7 Side Ground Receptacle Installation**	A
	4461205		Receptacle, CEE 7 Side Ground	
301	Use 2915230	1	**BATTERY CHARGER REPROGRAM CONTROLLER KIT (WAS P/N 1600466)**	

FIGURE 1-6. BATTERY CHARGER ASSEMBLY AND INSTALLATION (DELTA-Q CHARGER)

ITEM #	PART NUMBER	QTY.	DESCRIPTION	REV.

FIGURE 1-7. BATTERY CHARGER WITH INVERTER ASSEMBLY AND INSTALLATION (OPTIONAL ON ANSI & CSA SPEC MACHINES)

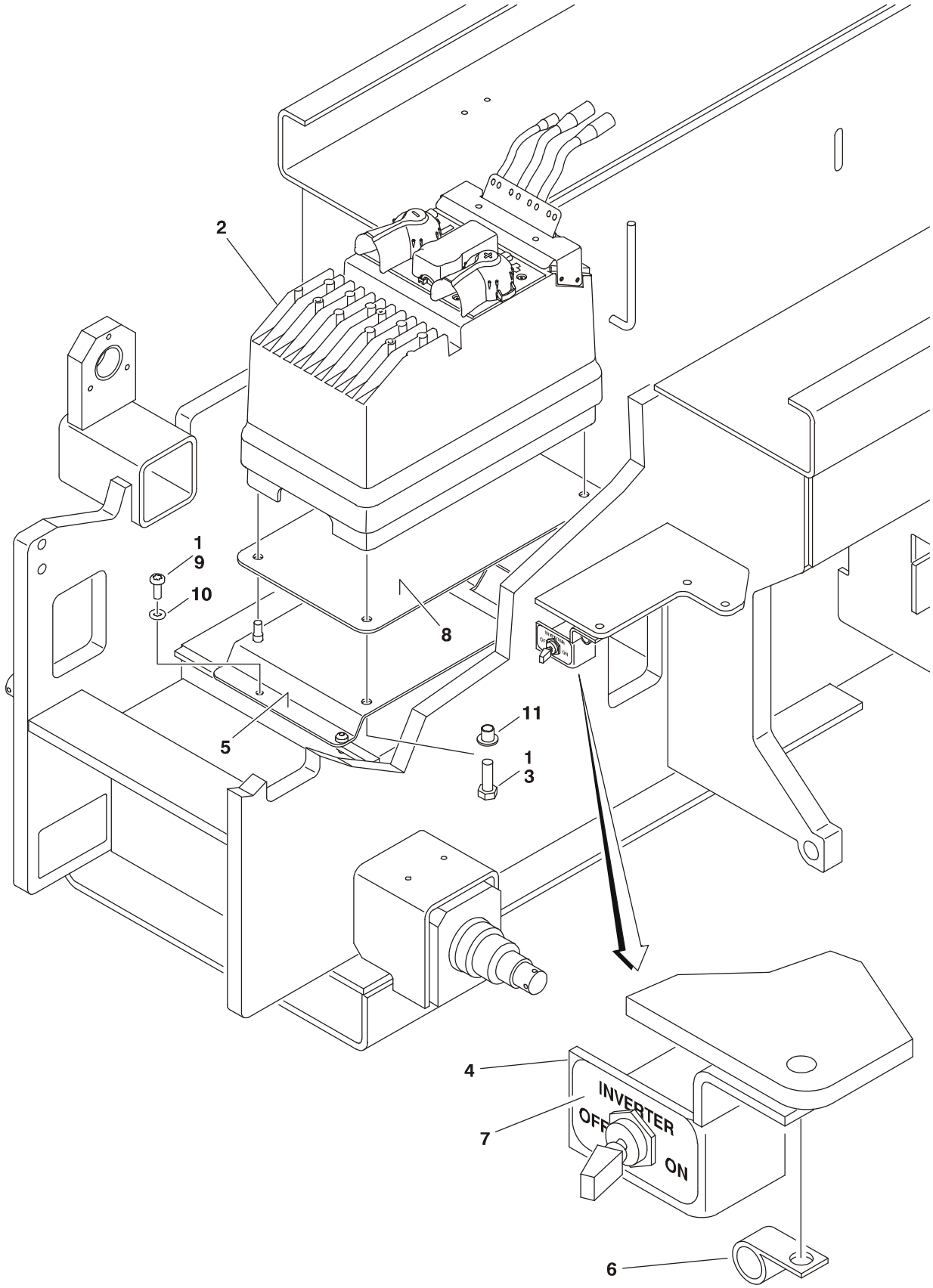

FIGURE 1-7. BATTERY CHARGER WITH INVERTER ASSEMBLY AND INSTALLATION (OPTIONAL ON ANSI & CSA SPEC MACHINES)

ITEM #	PART NUMBER	QTY.	DESCRIPTION	REV.
		Ref.	**BATTERY CHARGER ASSEMBLY**	
	0275103	Ref.	**1930ES**	E
	0275104	Ref.	**2030ES/2630ES**	D
	0275105	Ref.	**2646ES/3246ES**	D
1	0100011	A/R	Compound, Locking	
2	1001093839	1	Charger/Inverter Assembly	
3		4	Hardware Options:	
	0760812		Bolt M8 x 25mm	
	0760814		Bolt M8 x 30mm	
	3290805		Nut M8	
4	0902780	1	Bracket, Mounting (Remote Switch)	
5		1	Bracket, Mounting (Charger/Inverter)	
	0903444		1930ES	
	0903319		2030ES/2630ES/2646ES/3246ES	
6	1320043	1	Clamp	
7	1705052	1	Decal - On/Off	
8	2820239	1	Insulation, Charger Mounting	
9		A/R	Screw M6 Options:	
	4191706		12mm Length	
	4191707		16mm Length	
10	4811700	2	Flatwasher M6	
11	4740562	4	Washer, Special	
12 to 17	Not Used			
18	1706749	1	Decal - Inverter (Not Shown - Located on Frame Near Inverter)	
19		1	Decal - Hazardous Voltage Options (Not Shown - Located on Platform Near AC Box):	
	1706765		English Language	
	1001136847		Spanish Language	

FIGURE 1-8. LADDERS, BEACON LIGHT & ROTARY SENSOR COVER INSTALLATION

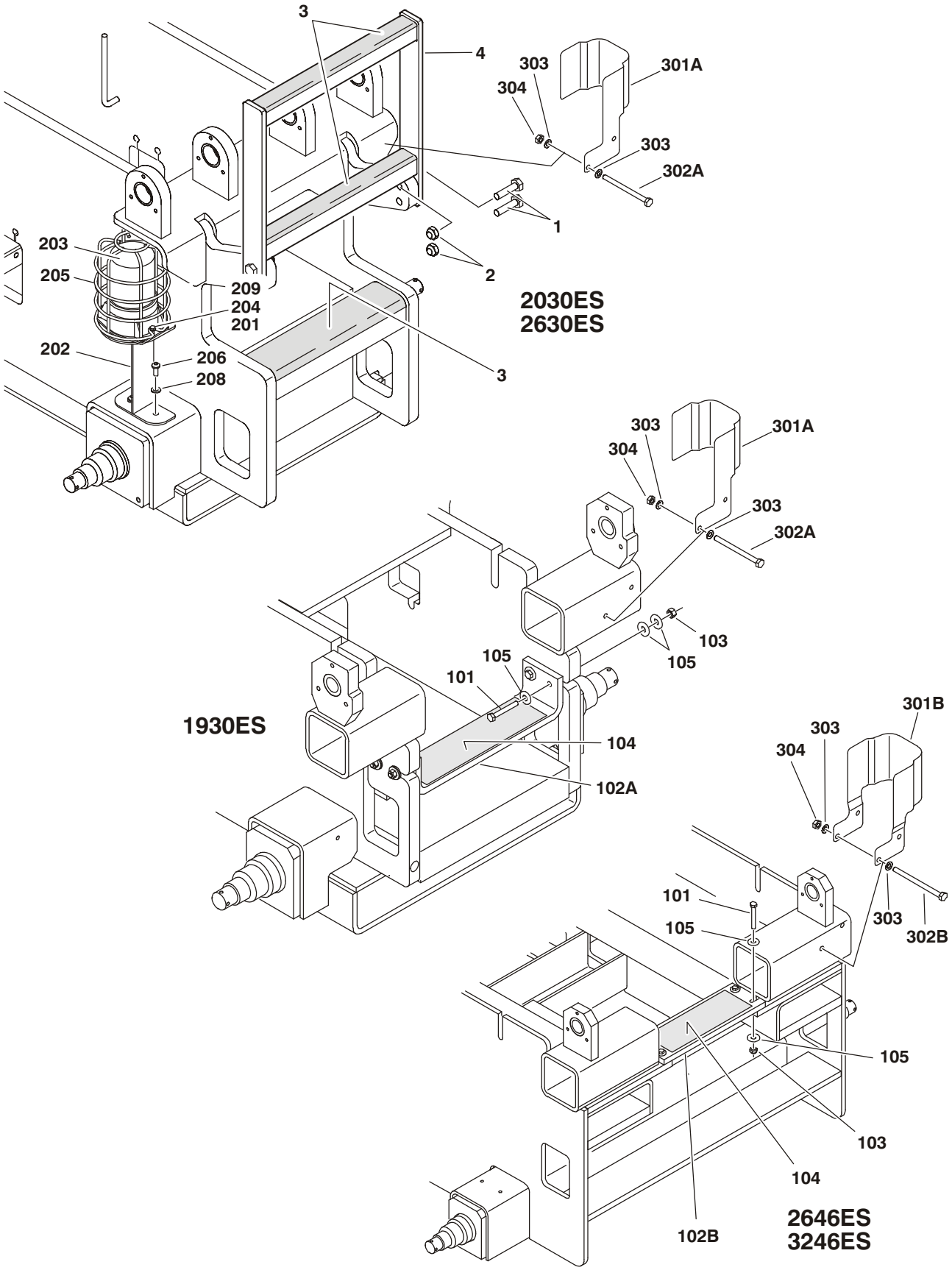

FIGURE 1-8. LADDERS, BEACON LIGHT & ROTARY SENSOR COVER INSTALLATION

ITEM #	PART NUMBER	QTY.	DESCRIPTION	REV.
		Ref.	**LADDER INSTALLATIONS**	
	0272887	Ref.	**2030ES**	B
	0272888	Ref.	**2630ES**	B
1	0701016	4	Bolt M10 x 40mm	
2	3291005	4	Locknut M10	
3	4420070	3	Tape, Anti-Skid	
4		1	Ladder Options:	
	4846812		2030ES	
	4846813		2630ES	
		Ref.	**LADDER INSTALLATIONS**	
	0275120	Ref.	**1930ES**	C
	0275212	Ref.	**2646ES/3246ES**	C
101		4	Bolt M6 Options:	
	0700615		35mm Length	
	0700617		45mm Length	
102		1	Ladder Options:	
102A	2930005		1930ES	
102B	3576349		2646ES/3246ES	
103		4	Locknut Options:	
	3290605		1930ES	
	3290607		2646ES/3246ES	
104	4420080	1	Tape, Anti-Skid	
105	4751400	A/R	Flatwasher 1/4” Wide	
		Ref.	**BEACON LIGHT INSTALLATIONS**	
	0272309	Ref.	**1930ES (Not Shown)**	D
	0274012	Ref.	**2030ES/2630ES**	B
	0272980	Ref.	**2646ES/3246ES**	D
201	0760410	2	Bolt M4 x 20mm	
202		1	Bracket Options:	
	0902905		1930ES	
	0903086		2030ES/2630ES	
	0902906		2646ES/3246ES	
203	2920161	1	Light, Beacon	
	7016319	1	Bulb, Replacement	
	7016372	1	Len, Replacement	
204	3290405	2	Locknut M4	
205	4060865	1	Guard	
206	4191707	2	Screw M6 x 16mm	
207	Not Used			
208	4811700	A/R	Flatwasher M6	
209	4750800	2	Flatwasher #8 (Wide)	

FIGURE 1-8. LADDERS, BEACON LIGHT & ROTARY SENSOR COVER INSTALLATION

ITEM #	PART NUMBER	QTY.	DESCRIPTION	REV.
		Ref.	**ROTARY ANGLE SENSOR COVER KIT**	
		Ref.	**Note: This kit is an optional aftermarket add-on for USA Built Machines S/N 0200198014 to Present Only. Not Available on previous S/Ns due to changes in frame design. Kit also includes instructions. Parts listed below are for service.**	
	1001105108	Ref.	**1930ES/2030ES/2630ES**	
	1001105109	Ref.	**2630ES/3246ES**	
301		1	Cover Options:	
301A	1001103029		Cover for 1930ES/2030ES/2630ES	
301B	1001103030		Cover for 2646ES/3246ES	
302		2	Bolt M6 Options:	
302A	0760610		Bolt 20mm Length for 1930ES/2030ES/2630ES	
302B	0760612		Bolt 25mm Length for 2646ES/3246ES	
303	4811700	4	Flatwasher 6mm	
304	3290605	2	Locknut M6	

SECTION 2
GROUND COMPONENTS

FIGURE 2-1.BATTERIES AND COVERS INSTALLATION

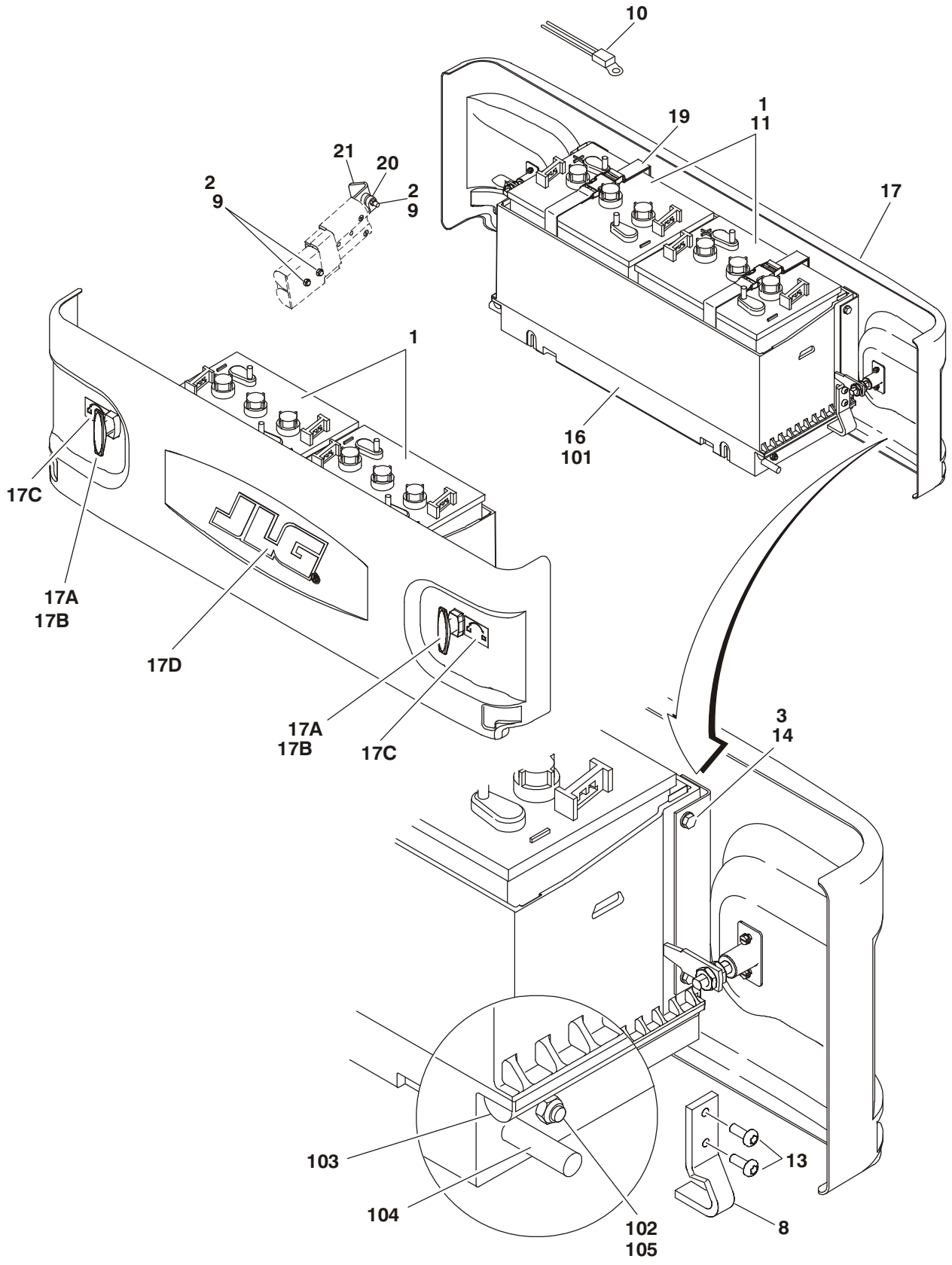

FIGURE 2-1. BATTERIES AND COVERS INSTALLATION

ITEM #	PART NUMBER	QTY.	DESCRIPTION	REV.
		Ref.	**BATTERIES AND COVERS INSTALLATION**	
		Ref.	**GC Type with 225 AH Rating Batteries:**	
	0275020	Ref.	**All Models (Standard Covers)**	D
	0275022	Ref.	**All Models (Locking Covers)**	D
	0275480	Ref.	**1930ES (UL Spec with Locking Covers)**	E
	0275021	Ref.	**2030ES/2630ES/2646ES/3246ES (UL Spec with Locking Covers)**	D
		Ref.	**EV Type with 244 AH Rating Batteries:**	
	0275042	Ref.	**2030ES/2630ES/2646ES/3246ES with Standard Covers**	C
	0275044	Ref.	**2030ES/2630ES/2646ES/3246ES with Locking Covers**	C
	0275043	Ref.	**2030ES/2630ES/2646ES/3246ES (UL Spec) with Locking Covers**	C
		Ref.	**AGM & EVG Type with 225 AH Rating Batteries:**	
	0275401	Ref.	**All Models (Standard Covers)**	C
	1001132233	Ref.	**All Models (Locking Covers)**	A
1		A/R	Battery Options:	
	0400216	4	Battery Type EV-145-WNL (Not Available on 1930ES)	
	1001112112	4	Battery Type EVGC6A-A	
	0400215	4	Battery Type GC-110-WNL	
2		A/R	Bolt Options:	
	0700615		Bolt M6 x 35mm	
	0700616		Bolt M6 x 40mm	
	4031713		Bolt, Sockethead M6 x 40mm	
3	0760610	8	Bolt M6 x 20mm	
4 to 7	Not Used			
8			Plate, Slide Stop Options:	
	3574981		Left Side	
	3574984		Right Side	
9	3290605	A/R	Locknut M6	
10	1001127269	1	Temperature Sensor Kit (Includes Sensor, Wire Nut & Instructions) (was p/n 1001112113)	
11	0100051	A/R	Grease, Terminal	
12	Not Used			
13	4191707	8	Screw M6 x 16mm	
14	4811700	8	Flatwasher M6	
15	Not Used			
16		2	Tray Assembly Options (See Items 101-106 for Breakdown):	
	0273698		USA & Belgium	
	0861678		UL Spec	
17		2	Cover Options:	
	1671202		Cover with Decals & Standard Latches	D
	1671204		Cover with Decals & Lockable Latches	D
	1671204		Cover, UL Spec with Decals & Lockable Latches	D
	1671203	1	Cover, Battery Less Decals & Latches **(Note: Must Purchase Decals & Latches Separately)**	
17A		4	Latch Options (2 Per Cover):	
	2940174		Standard	
	2940175		Locking	
	7027863		Key	

FIGURE 2-1. BATTERIES AND COVERS INSTALLATION (CONTINUED)

ITEM #	PART NUMBER	QTY.	DESCRIPTION	REV.
17B	4750800	4	Flatwasher #8 (2 Per Cover) (was p/n 4071102 Shim)	
17C	1706350	2	Decal - Cover	
17D	1705754	1	Decal - JLG	
18	Not Used			
19	4240172	4	Strap, Battery (UL Spec)	
20	1321130	1	Clamp (UL Spec) (1930ES Only)	
21	Not Available	1	Handle, Disconnect (UL Spec) (1930ES Only)	
	1001110826	1	Bracket, Disconnect Mounting (UL Spec) (1930ES Only)	
		Ref.	**TRAY ASSEMBLY OPTIONS:**	
	0273698	Ref.	**USA & Belgium**	E
	0861678	Ref.	**UL Spec**	D
101	Purchase Item 16	1	Tray, Battery	
102	3290605	A/R	Locknut	
103	3340975	2	Pad, Wear (Note: Wear Pad not available separately from Tray Assembly on some applications.)	
104			Stop, Battery Box Options:	
		Ref.	**NOTE: Requires (2) 3820032 Rivet & (1) 4811600 Washer**	
	4220252	1	LH	
	4220253	1	RH	
105	3820032	A/R	Rivet (Not Shown)	
106	4811600	A/R	Washer (Not Shown)	

FIGURE 2-1. BATTERIES AND COVERS INSTALLATION (CONTINUED)

ITEM #	PART NUMBER	QTY.	DESCRIPTION	REV.

FIGURE 2-2.GROUND CONTROL ASSEMBLY & INSTALLATION

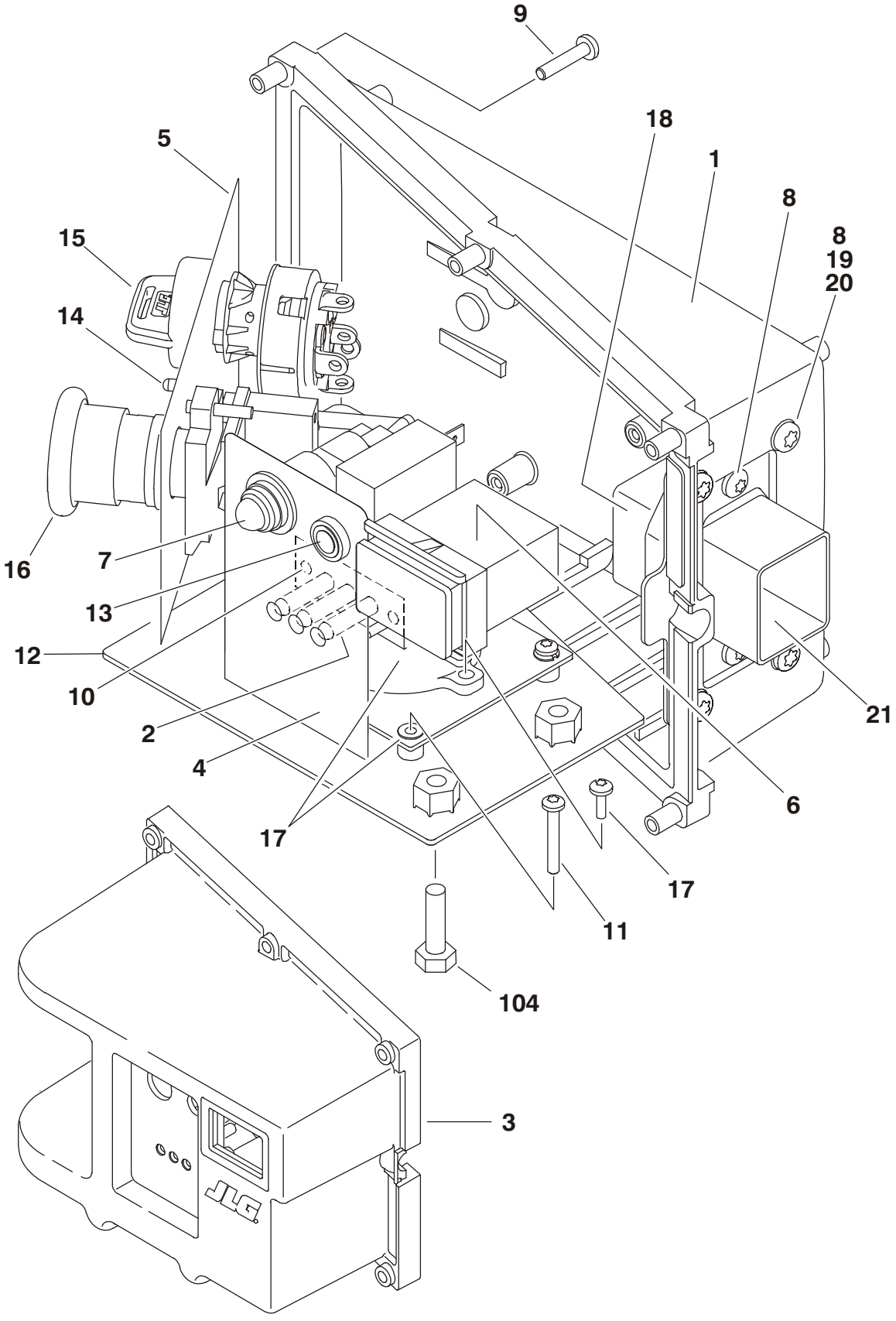

FIGURE 2-2. GROUND CONTROL ASSEMBLY & INSTALLATION

ITEM #	PART NUMBER	QTY.	DESCRIPTION	REV.
		Ref.	**GROUND CONTROL ASSEMBLY**	
	1001114929	Ref.	**ANSI & ANSI Export & UL Specs**	A
	1001114932	Ref.	**ANSI Export & Japanese Specs**	A
	1001114931	Ref.	**Australian Specs without Overload (USA Built Machines S/N 0200198014 to S/N 0200203604 & China Built Machines S/N B200000100 to S/N B200002114)**	A
	1001114932	Ref.	**Australian Specs without Overload (USA Built Machines S/N 0200203604 to Present & China Built Machines S/N B200002114 to Present)**	A
	1001114930	Ref.	**Australian & CE Specs with Overload**	A
1	0380025	1	Box, Ground Control	
2	0610161	1	Board, PC (Battery Charger LED)	
3	1671105	1	Cover, Front	
4		1	Decal - LED Options:	
	1705696		ANSI, ANSI Export & UL Specs	
	1705697		ANSI Export, CE & Japanese Specs	
	1705696		Australian Specs without Overload (USA Built Machines S/N 0200198014 to S/N 0200203604 & China Built Machines S/N B200000100 to S/N B200002114)	
	1705697		Australian Specs without Overload (USA Built Machines S/N 0200203604 to Present & China Built Machines S/N B200002114 to Present)	
	1705697		Australian Spec with Overload	
5	1705698	1	Decal - Function	
6	2420172	1	Hourmeter	
7		1	Component Options:	
	3520193		Plug	
	2920026		Lamp	
	2920094	A/R	Bulb (Optional)	
8	3900336	6	Screw, Torx #10-32NF x 1/2”	
9	3900338	6	Screw, Torx M4 x 20mm	
10	3900339	2	Screw, Plastite #6 x 1/2”	
11	3900356	4	Screw, Torx M3.5 x 16mm	
12	4340739	1	Plate, Mounting	
13	4360069	1	Breaker, Circuit - 10 Amp	
14	4360328	1	Switch, Toggle	
15		1	Keyswitch Options:	
	4360469		ANSI, ANSI Export, Japanese & UL Specs	
	4360470		Australian Specs without Overload (USA Built Machines S/N 0200198014 to S/N 0200203604 & China Built Machines S/N B200000100 to S/N B200002114)	
	4360469		Australian Specs without Overload (USA Built Machines S/N 0200203604 to Present & China Built Machines S/N B200002114 to Present)	
	2860030	1	Key, Replacement (Fits All Specs)	
16	4360475	1	Switch, Emergency Stop	
	7020175	1	Cap	
	7020176	1	Block, Contact	
17	1001114933	1	Module, Tilt (Includes Module & Mounting Plate & Hardware)	
18	1001114937	1	Mount, Harness Bulkhead (Ground Control)	

FIGURE 2-2. GROUND CONTROL ASSEMBLY & INSTALLATION (CONTINUED)

ITEM #	PART NUMBER	QTY.	DESCRIPTION	REV.
19	3321005	4	Locknut #10-32NF	
20	4751000	4	Flatwasher #10 Wide	
21	1001114935	1	Harness, Control Box (See Section 7 for Breakdown)	
		Ref.	**GROUND CONTROL BOX INSTALLATION**	
	1001114885	Ref.	**ANSI & ANSI Export & UL Specs**	A
	1001114886	Ref.	**ANSI Export & Japanese Specs**	A
	1001114924	Ref.	**Australian Specs without Overload (USA Built Machines S/N 0200198014 to S/N 0200203604 & China Built Machines S/N B200000100 to S/N B200002114)**	A
	1001114886	Ref.	**Australian Specs without Overload (USA Built Machines S/N 0200203604 to Present & China Built Machines S/N B200002114 to Present)**	A
	1001114925	Ref.	**Australian & CE Specs with Overload**	A
101 to 103	Not Used			
104	0700615	3	Bolt M6 x 35mm	
	0272878	Ref.	**ANTI-VANDELISM PACKAGE INSTALLATION (NOT SHOWN)**	A
	1671124	1	Cover, Lockable Ground Control Box	

FIGURE 2-2. GROUND CONTROL ASSEMBLY & INSTALLATION (CONTINUED)

ITEM #	PART NUMBER	QTY.	DESCRIPTION	REV.

FIGURE 2-3.BRAKE DISCONNECT/RELEASE & MDI (MULTIFUNCTION DIGITAL INDICATOR) GAUGE INSTALLATIONS

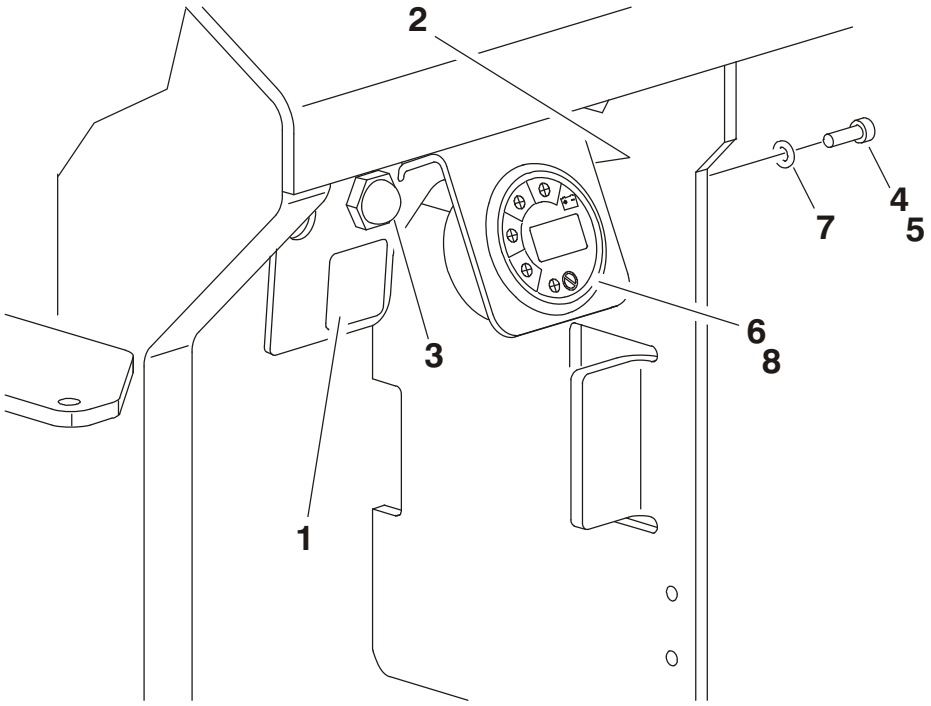

FIGURE 2-3. BRAKE DISCONNECT/RELEASE & MDI (MULTIFUNCTION DIGITAL INDICATOR) GAUGE INSTALLATIONS

ITEM #	PART NUMBER	QTY.	DESCRIPTION	REV.
	0275530	Ref.	**MDI (MULTIFUNCTION DIGITAL INDICATOR) GAUGE & BRAKE RELEASE INSTALLATION**	D
1	1706679	1	Decal - Brake Release	
2	1001094203	1	Bracket	
3	4360387	1	Switch, Push Button	
4	4031607	2	Capscrew M5 x 16mm	
5	0100011	A/R	Compound, Locking	
6	0100048	A/R	Grease, Dielectric	
7	4811600	2	Flatwasher M5	
8	1001092454	1	Gauge, MDI (Multifunction DIgital Indicator)	
9	1001093556	1	MDI Harness (Not Shown - See Section 7 for Breakdown)	

FIGURE 2-3. BRAKE DISCONNECT/RELEASE & MDI (MULTIFUNCTION DIGITAL INDICATOR) GAUGE INSTALLATIONS (CONTINUED)

ITEM #	PART NUMBER	QTY.	DESCRIPTION	REV.

SECTION 3
SCISSOR ARMS

FIGURE 3-1.SCISSOR ARMS INSTALLATION - 1930ES

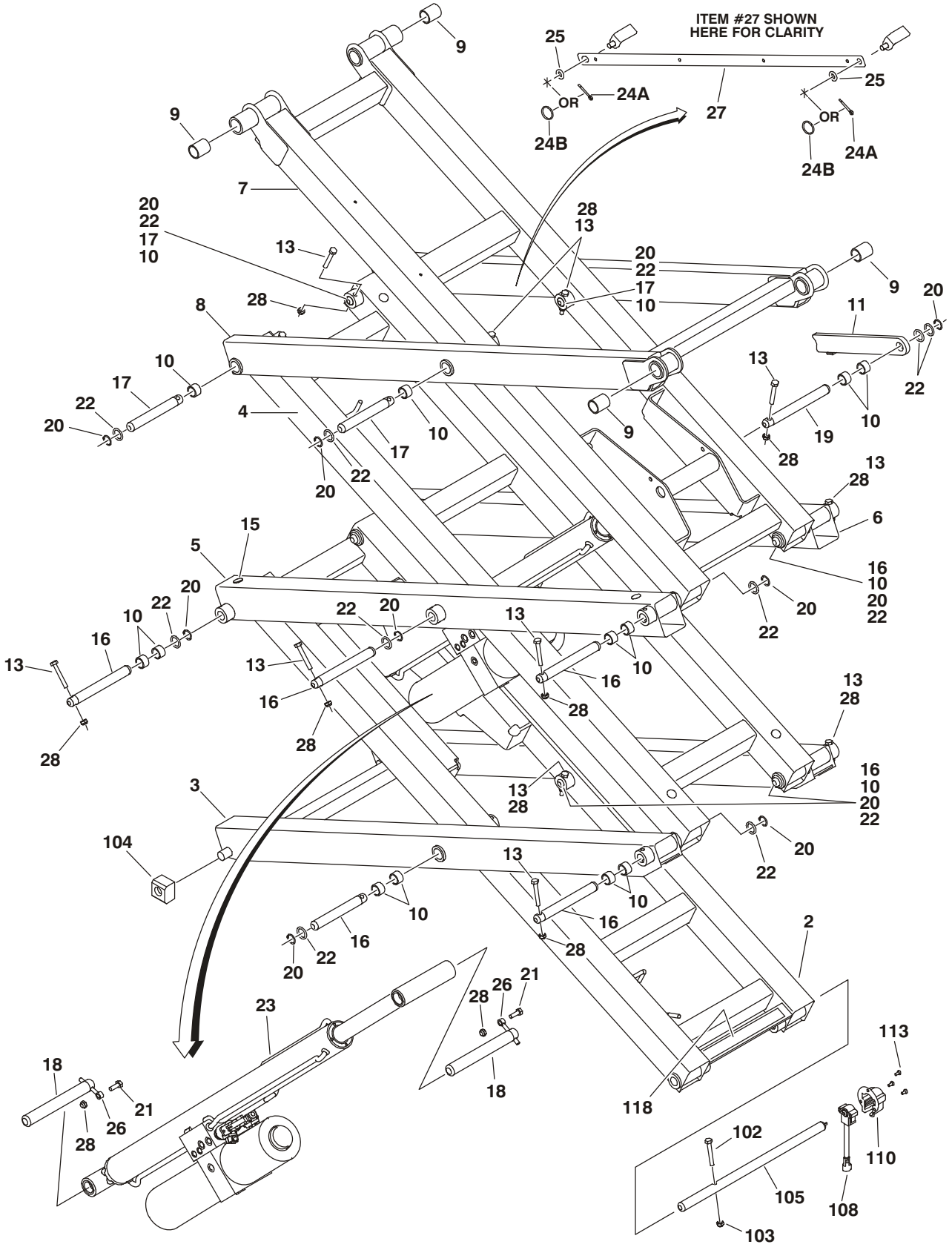

FIGURE 3-1. SCISSOR ARMS INSTALLATION - 1930ES

ITEM #	PART NUMBER	QTY.	DESCRIPTION	REV.
		Ref.	**SCISSOR ARMS ASSEMBLY - 1930ES**	
	0274841	Ref.	**Machines with Standard Hydraulic Oil**	K
	0200838	Ref.	**Machines with Biodegradeable Hydraulic Oil**	E
1	Not Used			
2	0200825	1	Arm - Lower Inboard	
3	0200810	1	Arm - Lower Outboard	
4	0200824	1	Arm - Mid Inboard	
5	0200823	1	Arm - Mid Outboard (Left Side)	
6	0200822	1	Arm - Mid Outboard (Right Side)	
7	0200821	1	Arm - Upper Inboard	
8	0200815	1	Arm - Upper Outboard	
9	0440266	4	Bearing	
10	0440264	28	Bearing	
11	3574159	1	Prop, Safety	
12	Not Used			
13	0701022	14	Bolt M10 x 70mm	
14	Not Used			
15	3340962	16	Pad	
16	3423031	9	Pin	
17	3423032	4	Pin	
18	3423038	2	Pin	
19	3423042	1	Pin	
20	3760115	14	Ring, Retaining	
21	0761014	2	Bolt M10 x 30mm	
22	4740531	15	Washer, Special	
23		1	Lift Cylinder Assembly Options (See Section 5 for Breakdown):	
	1684484		Machines with Standard Hydraulic Oil	
	1684526		Machines with Biodegradeable Hydraulic Oil	
24		2	Hardware Options:	
24A	3450303		Pin, Cotter 3/32” x 3/4”	
24B	3760170		Ring, Split	
25	4812000	2	Flatwasher M10	
26	3841143	2	Keeper, Pin	
27	3576093	1	Bar, Cable Carrier	
28	3291007	16	Locknut M10 (was p/n 3291005)	
			— — — — — — — — — —	
	2902455	1	Arms Kit - 1930ES (Includes Items 2-11)	N
		Ref.	**SCISSOR ARMS INSTALLATIONS - 1930ES**	
	0274874	Ref.	**Machines with Standard Hydraulic Oil**	E
	0275692	Ref.	**Machines with Biodegradeable Hydraulic Oil**	B
101	Not Used			
102	0701022	1	Bolt M10 x 70mm	
103	3291005	1	Locknut M10	
104	3340964	2	Pad, Slide	
105	3423239	1	Pin, Sensor	
106 to 107	Not Used			

FIGURE 3-1. SCISSOR ARMS INSTALLATION - 1930ES (CONTINUED)

ITEM #	PART NUMBER	QTY.	DESCRIPTION	REV.
108	1001092354	1	Switch, Rotary Angle Sensor (was p/n 4360526)	
109	Not Used			
110	3200454	1	Mount, Switch	
111 to 112	Not Used			
113	4191706	3	Screw M6 x 12mm	
114	Not Used			
115	1061036	1	Cable, Manual Descent (Not Shown)	
	7020218	1	T-Handle (with 1/4”-20 Threads)	
	70001878	1	T-Handle (with 5mm Threads)	
116	3321402	1	Jam Nut (Not Shown)	
117	4160078	1	Spring, Compression (Not Shown)	
118	4420070	1	Tape, Anti-Skid	

FIGURE 3-1. SCISSOR ARMS INSTALLATION - 1930ES (CONTINUED)

ITEM #	PART NUMBER	QTY.	DESCRIPTION	REV.

FIGURE 3-2.SCISSOR ARMS INSTALLATION - 2030ES

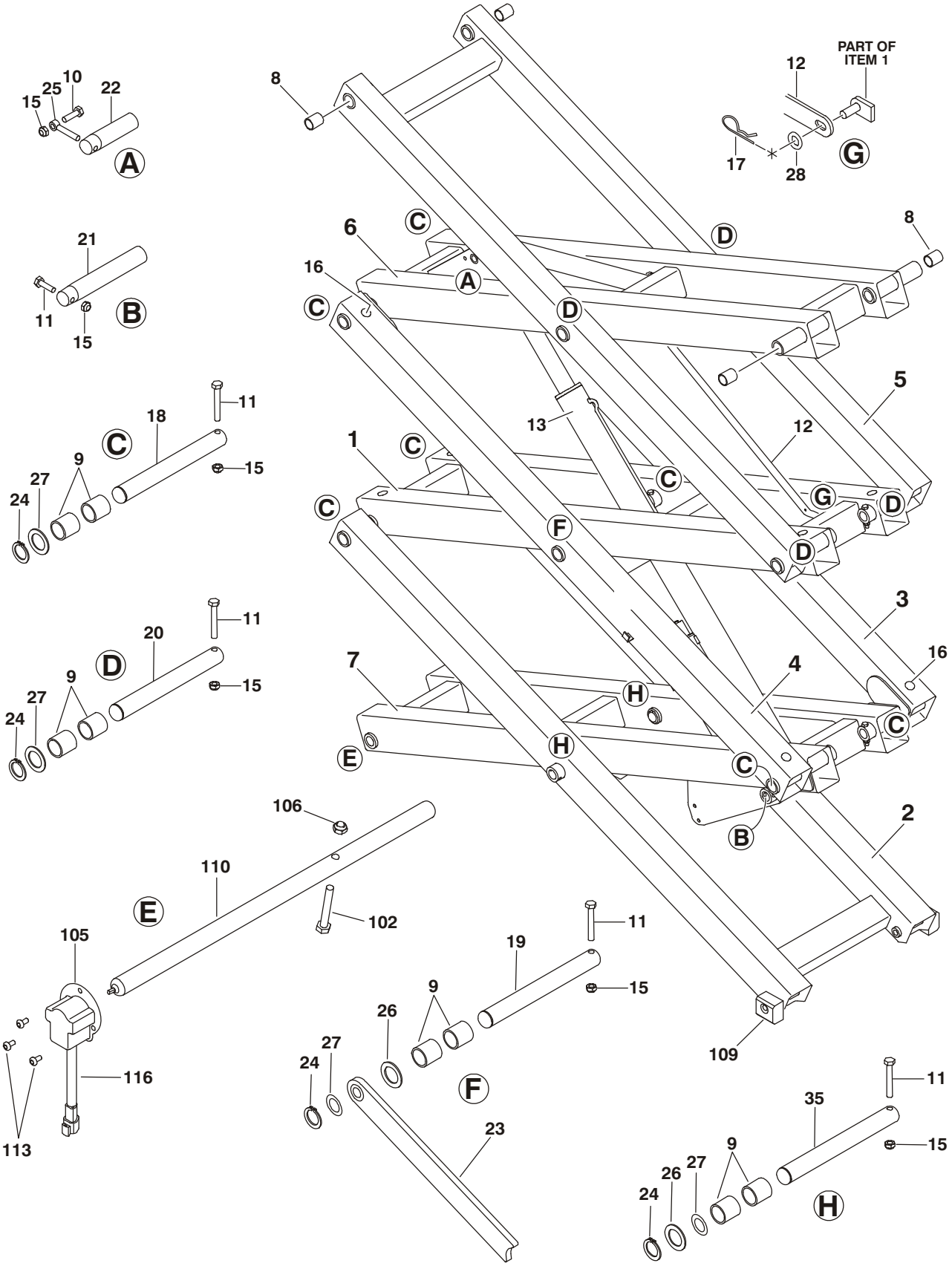

FIGURE 3-2. SCISSOR ARMS INSTALLATION - 2030ES

ITEM #	PART NUMBER	QTY.	DESCRIPTION	REV.
		Ref.	**SCISSOR ARMS ASSEMBLY - 2030ES**	
	0275018	Ref.	**Machines with Standard Hydraulic Oil**	I
	0200839	Ref.	**Machines with Biodegradeable Hydraulic Oil**	G
1	0200799	1	Arm - Mid Inboard	
2	0200802	1	Arm - Lower Outboard	
3	0200803	1	Arm - Mid Outboard (Left Side)	
4	0200804	1	Arm - Mid Outboard (Right Side)	
5	0200807	1	Arm - Upper Outboard	
6	0200816	1	Arm - Upper Inboard	
7	0200834	1	Arm - Lower Inboard	
8	0440266	4	Bearing	
9	0440267	28	Bearing	
10	0701015	1	Bolt M10 x 35mm	
11	0701022	15	Bolt M10 x 70mm	
12	1180382	1	Carrier, Cable	
13		1	Lift Cylinder Assembly Options (See Section 5 for Breakdown):	
	1684487		Machines with Standard Hydraulic Oil	
	1684527		Machines with Biodegradeable Hydraulic Oil	
14	Not Used			
15	3291005	16	Locknut M10	
16	3340962	16	Pad, Arm	
17	3420156	2	Pin, Cotter	
18	3422997	7	Pin	
19	3423014	1	Pin	
20	3423036	4	Pin	
21	3423038	1	Pin	
22	3423067	1	Pin	
23	3574161	1	Bar, Prop Attach	
24	3760387	14	Ring, Retaining	
25	3841143	1	Keeper, Pin	
26	4071094	A/R	Shim, Spacer	
27	4740438	14	Washer, Special	
28	4812000	2	Flatwasher M10	
30 to 34	Not Used			
35	3423014	2	Pin	
			— — — — — — — — — — —	
	2902499	1	Scissor Arm Kit - 2030ES (Includes Items 2-9,12 & 23)	K
		Ref.	**SCISSOR ARMS INSTALLATIONS - 2030ES**	
	0275016	Ref.	**Machines with Standard Hydraulic Oil**	D
	0275693	Ref.	**Machines with Biodegradeable Hydraulic Oil**	B
101	Not Used			
102	0701022	1	Bolt M10 x 70mm	
103	1061034	1	Cable, Manual Descent (Not Shown):	
	7020218	1	T-Handle (with 1/4”-20 Threads)	
	70001878	1	T-Handle (with 5mm Threads)	
104	Not Used			

FIGURE 3-2. SCISSOR ARMS INSTALLATION - 2030ES (CONTINUED)

ITEM #	PART NUMBER	QTY.	DESCRIPTION	REV.
105	3200454	1	Mount, Switch	
106	3291005	1	Locknut M10	
107	Not Used			
108	3321402	1	Nut, Jam 1/4”-28NF (Not Shown)	
109	3340957	2	Pad, Slide	
110	3423259	1	Pin, Sensor	
111	Not Used			
112	4160078	1	Spring, Compression (Not Shown)	
113	4191706	3	Screw M6 x 12mm	
114 to 115	Not Used			
116	1001092354	1	Switch, Rotary Angle Sensor (was p/n 4360526)	

FIGURE 3-2. SCISSOR ARMS INSTALLATION - 2030ES (CONTINUED)

ITEM #	PART NUMBER	QTY.	DESCRIPTION	REV.

FIGURE 3-3.SCISSOR ARMS INSTALLATION - 2630ES

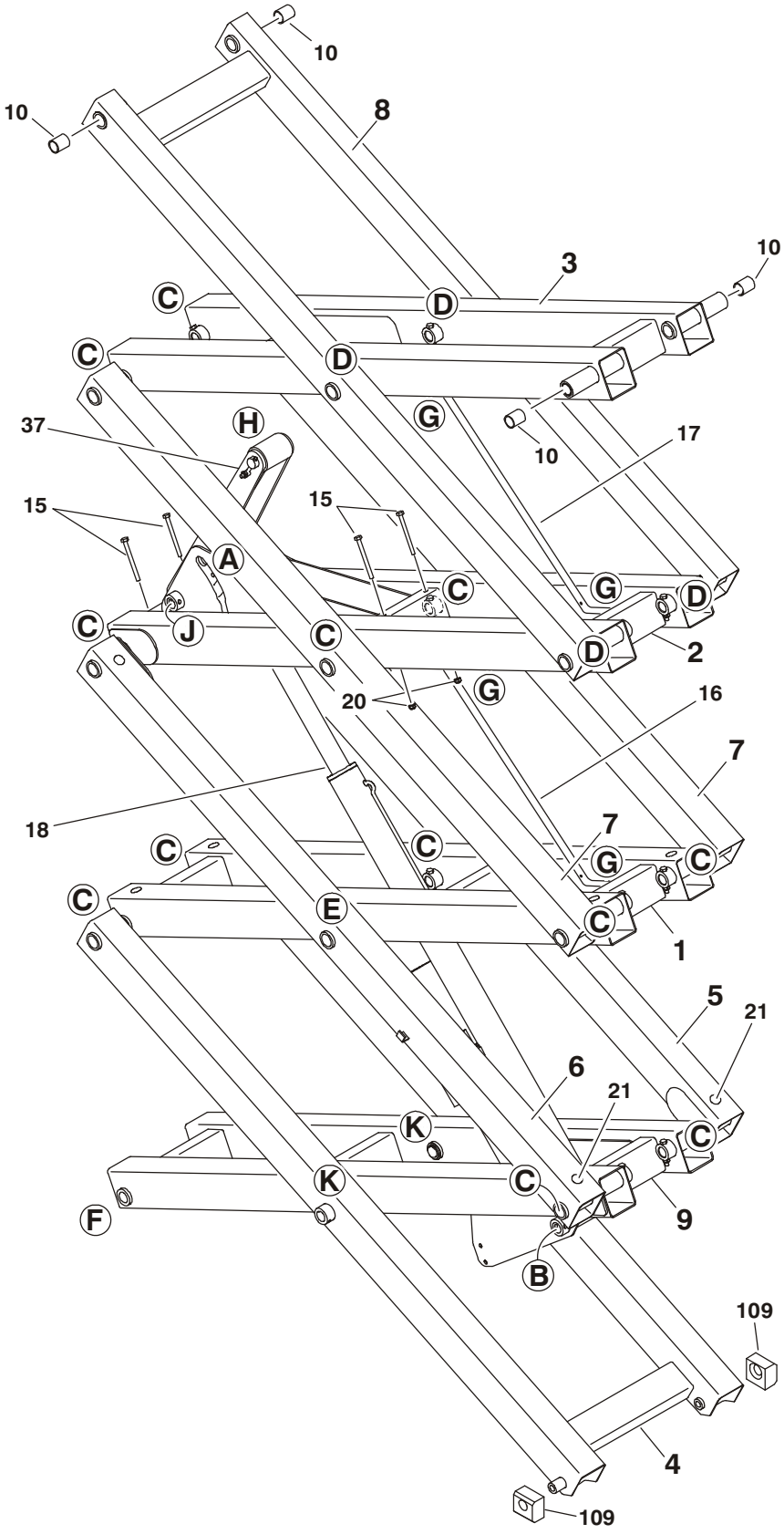

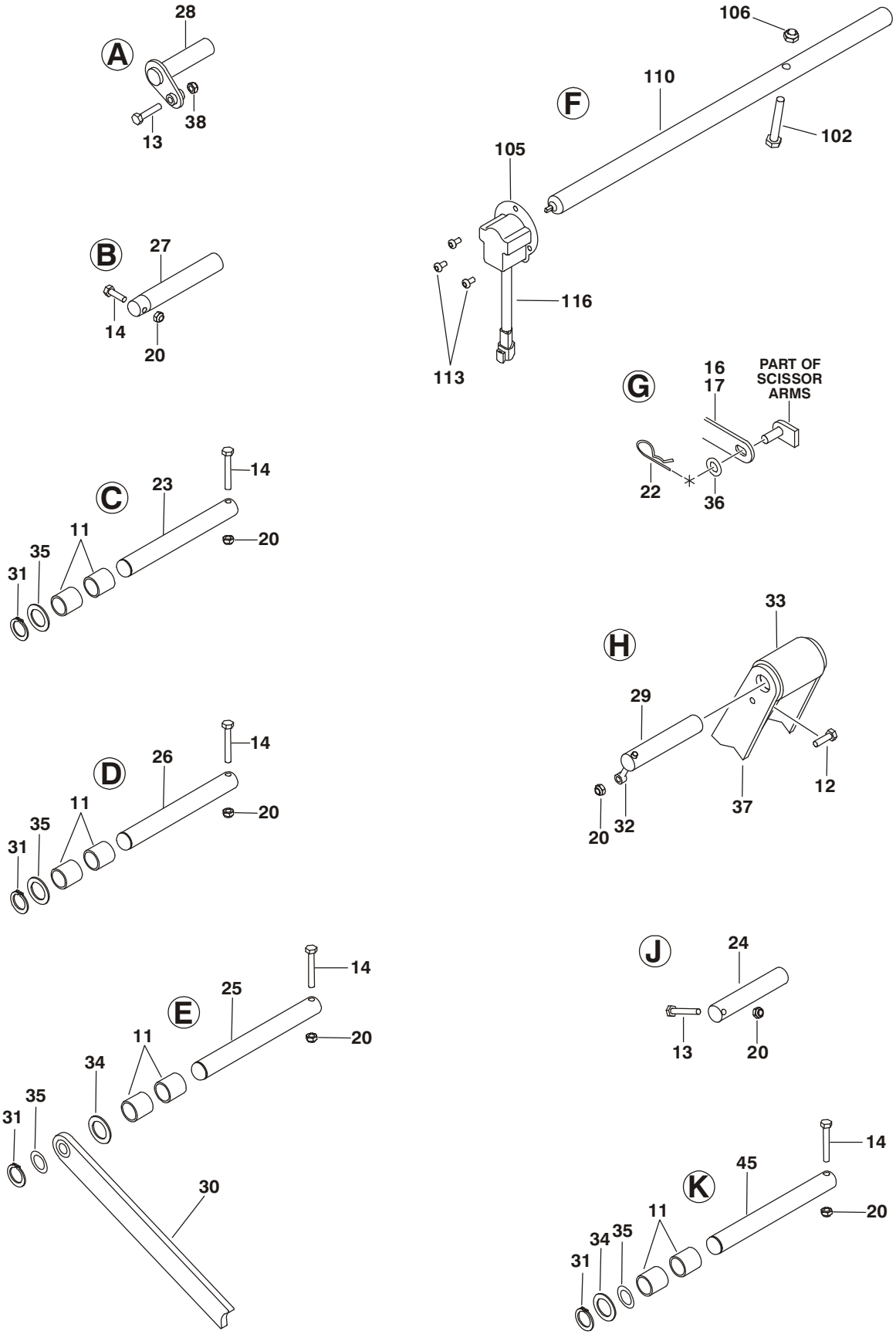
A
28
38
13
B
27
14
20
C
23
14
20
11
35
31
D
26
14
20
11
35
31
E
25
14
20
11
34
35
31
30
F
106
110
102
105
116
113
G
16
17
PART OF SCISSOR ARMS
22
36
H
33
29
12
37
20
32
J
24
13
20
K
45
14
20
11
34
35
31

FIGURE 3-3. SCISSOR ARMS INSTALLATION - 2630ES

ITEM #	PART NUMBER	QTY.	DESCRIPTION	REV.
		Ref.	**SCISSOR ARMS ASSEMBLY - 2630ES**	
	0275019	Ref.	**Machines with Standard Hydraulic Oil**	J
	0200840	Ref.	**Machines with Biodegradeable Hydraulic Oil**	H
1	0200799	1	Arm - Lower Mid Inboard	
2	0200800	1	Arm - Upper Mid Inboard	
3	0200801	1	Arm - Upper Inboard	
4	0200802	1	Arm - Lower Outboard	
5	0200803	1	Arm - Lower Mid Outboard (Left Side)	
6	0200804	1	Arm - Lower Mid Outboard (Right Side)	
7	0200805	2	Arm - Upper Mid Out board	
8	0200807	1	Arm - Upper Outboard	
9	0200834	1	Arm - Lower Inboard	
10	0440266	4	Bearing	
11	0440267	42	Bearing	
12	0701015	1	Bolt M10 x 35mm	
13	0701017	1	Bolt M10 x 45mm	
14	0701022	18	Bolt M10 x 70mm	
15	0701029	4	Bolt M10 x 120mm	
16	1180382	1	Carrier, Cable	
17	1180383	1	Carrier, Cable	
18		1	Lift Cylinder Assembly Options (See Section 5 for Breakdown):	
	1684488		Machines with Standard Hydraulic Oil	
	1684528		Machines with Biodegradeable Hydraulic Oil	
19	Not Used			
20	3291005	23	Locknut M10	
21	3340962	24	Pad, Arm	
22	3420156	2	Pin, Cotter	
23	3422997	13	Pin	
24	3422998	1	Pin	
25	3423014	1	Pin	
26	3423036	4	Pin	
27	3423038	1	Pin	
28	3423039	1	Pin	
29	3423067		Pin	
30	3574161	1	Bar, Prop Attach	
31	3760387	20	Ring, Retaining	
32	3841143	1	Keeper, Pin	
33	3860107	1	Roller	
34	4071094	A/R	Shim, Spacer	
35	4740438	20	Washer, Special	
36	4812000	2	Flatwasher M10	
37	4846752	1	Kicker, Arm	
38	3291007	1	Locknut M10	
39 to 44	Not Used			
45	3423014	2	Pin	
			— — — — — — — — — — —	
	2902500	1	Scissor Arm Kit - 2630ES (Includes Items 1-11,16,17, 30 & 37)	M

FIGURE 3-3. SCISSOR ARMS INSTALLATION - 2630ES (CONTINUED)

ITEM #	PART NUMBER	QTY.	DESCRIPTION	REV.
		Ref.	**SCISSORS ARMS INSTALLATION**	
	0275017	Ref.	**Machines with Standard Hydraulic Oil**	D
	0275694	Ref.	**Machines with Biodegradeable Hydraulic Oil**	B
101	Not Used			
102	0701022	1	Bolt M10 x 70mm	
103	1061034	1	Cable, Manual Descent (Not Shown):	
	7020218	1	T-Handle (with 1/4”-20 Threads)	
	70001878	1	T-Handle (with 5mm Threads)	
104	Not Used			
105	3200454	1	Mount, Switch	
106	3291005	1	Locknut M10	
107	Not Used			
108	3321402	1	Nut, Jam 1/4”-28NF (Not Shown)	
109	3340957	2	Pad, Slide	
110	3423259	1	Pin, Sensor	
111	Not Used			
112	4160078	1	Spring, Compression (Not Shown)	
113	4191706	3	Screw M6 x 12mm	
114 to 115	Not Used			
116	1001092354	1	Switch, Rotary Angle Sensor (was p/n 4360526)	

FIGURE 3-4.SCISSOR ARMS INSTALLATION - 2646ES/3246ES

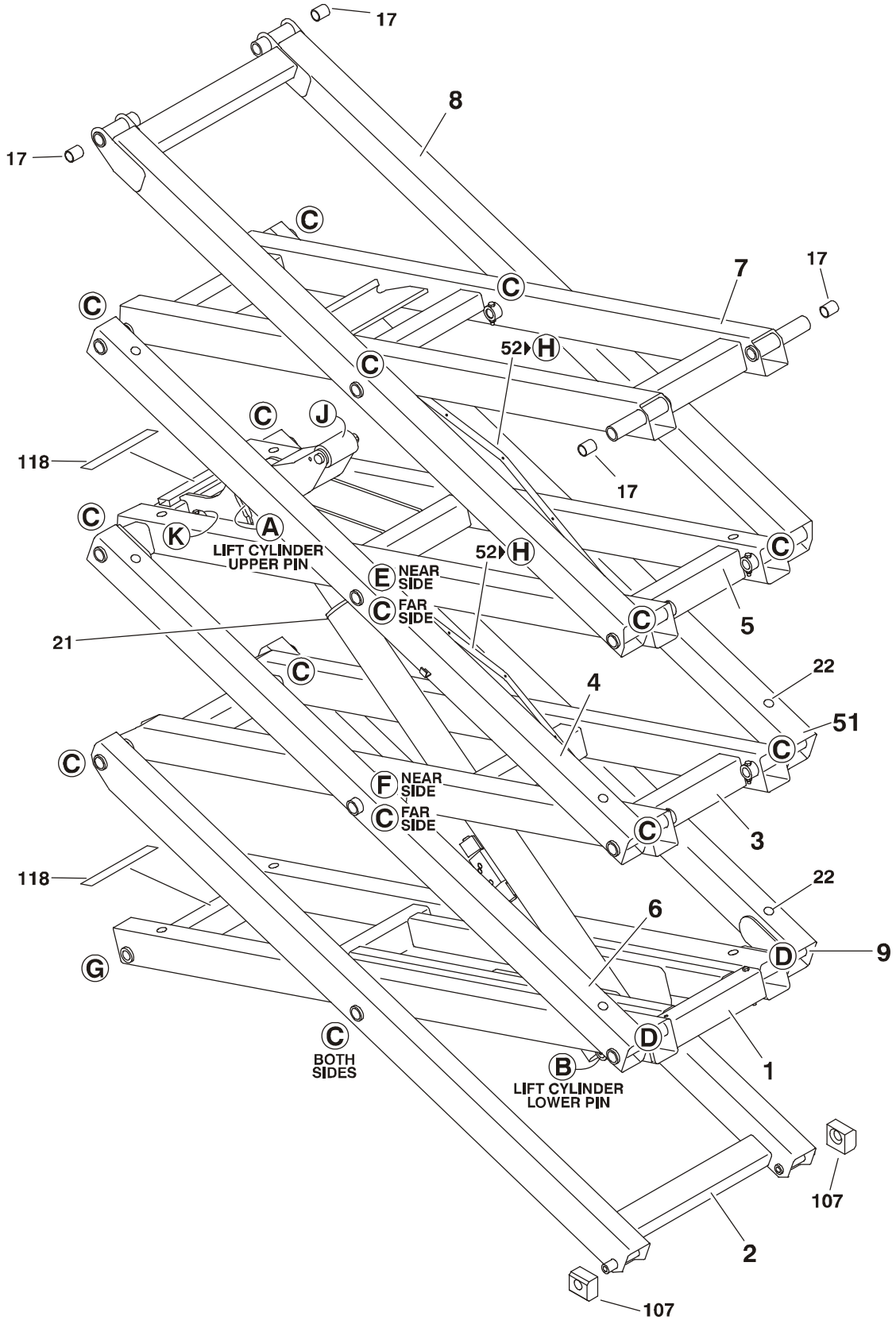

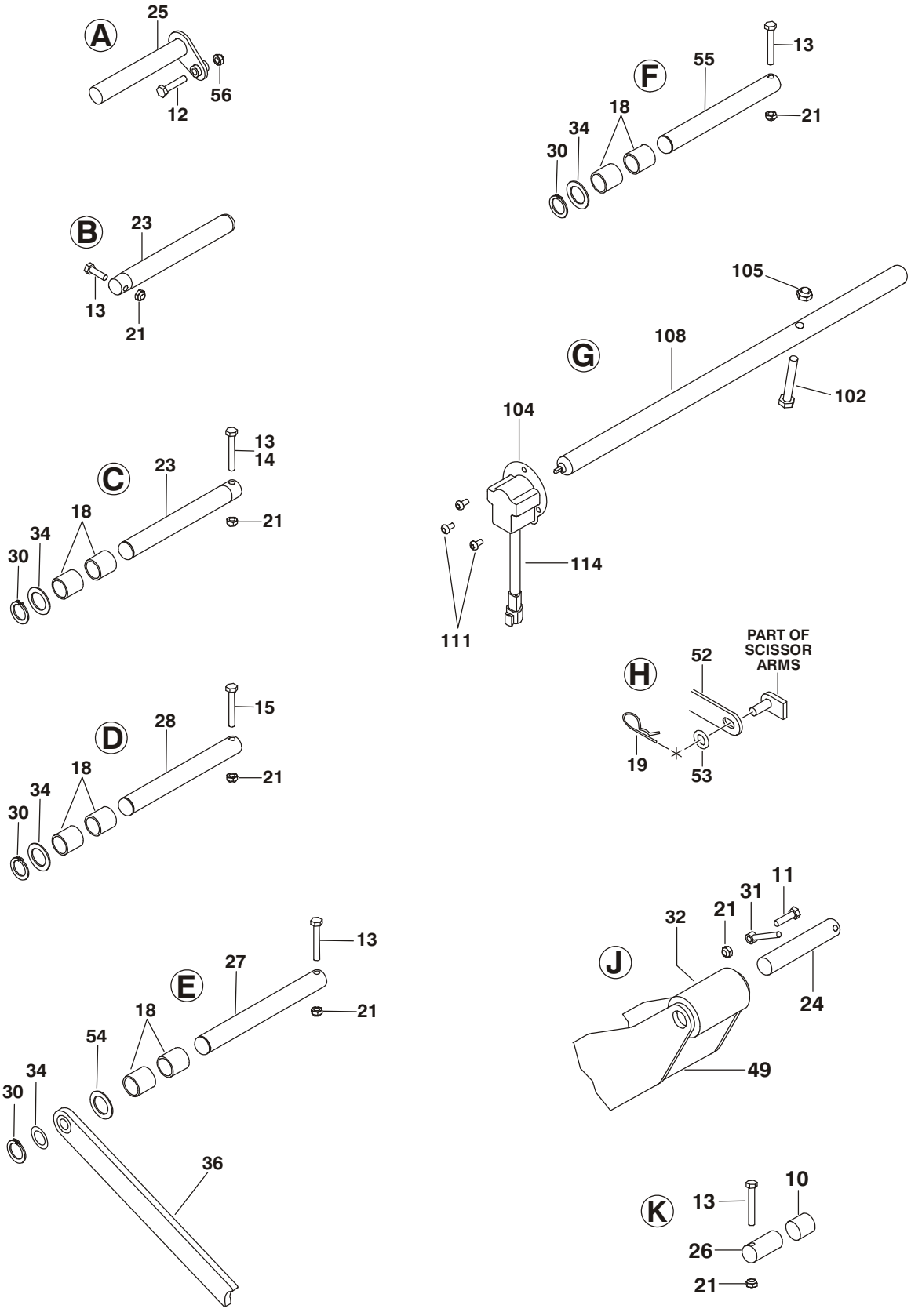
A
25
56
12
B
23
13
21
C
13
14
23
18
34
30
21
D
15
28
18
34
30
21
E
13
27
18
54
34
30
21
36
F
13
55
18
34
30
21
G
105
108
102
104
114
111
H
PART OF SCISSOR ARMS
52
19
53
J
11
31
21
32
24
49
K
13
10
26
21

FIGURE 3-4. SCISSOR ARMS INSTALLATION - 2646ES/3246ES

ITEM #	PART NUMBER	QTY.	DESCRIPTION	REV.
		Ref.	**SCISSOR ARMS ASSEMBLIES - 2646ES/3246ES**	
	0274880	Ref.	**2646ES with Standard Hydraulic Oil**	H
	0200841	Ref.	**2646ES with Biodegradeable Hydraulic Oil**	F
	0274878	Ref.	**3246ES with Standard Hydraulic Oil**	H
	0200842	Ref.	**3246ES with Biodegradeable Hydraulic Oil**	F
1	0200832	1	Arm - Lower Inboard	
2	0200783	1	Arm - Lower Outboard	
3	0200831	1	Arm - Lower Mid Inboard	
4	0200830	1	Arm - Upper Mid Outboard (Right Side)	
5	0200829	1	Arm - Upper Mid Inboard	
6	0200828	1	Arm - Lower Mid Outboard (Right Side)	
7	0200827	1	Arm - Upper Inboard	
8	0200789	1	Arm - Upper Outboard	
9	0200826	1	Arm - Lower Mid Outboard (Left Side)	
10	0440257	2	Bearing	
11	0701016	1	Bolt M10 x 40mm	
12	0701020	1	Bolt M10 x 60mm	
13	0701022	19	Bolt M10 x 70mm	
14	0701027	2	Bolt M10 x 100mm	
15	0701029	2	Bolt M10 x 120mm	
16		1	Lift Cylinder Assembly Options (See Section 5 for Breakdown):	
	1684489		2646ES with Standard Hydraulic Oil	
	1684529		2646ES with Biodegradeable Hydraulic Oil	
	1684490		3246ES with Standard Hydraulic Oil	
	1684530		3246ES with Biodegradeable Hydraulic Oil	
17	0440266	4	Bearing	
18	0440267	40	Bearing	
19	3420156	4	Pin, Cotter	
20	Not Used			
21	3291005	24	Locknut M10	
22	3340962	24	Pad, Arm	
23	3422997	17	Pin	
24	3422998	1	Pin	
25	3423009	1	Pin	
26	3423011	2	Pin	
27	3423014	1	Pin	
28	3423026	2	Pin	
29	Not Used			
30	3760387	20	Ring, Retaining	
31	3841143	1	Keeper, Pin	
32	3860104	1	Roller	
33	Not Used			
34	4740438	20	Washer, Special	
35	Not Used			
36	3574161	1	Prop, Safety	
37 to 48	Not Used			
49	4846684	1	Kicker, Arm	
50	Not Used			

FIGURE 3-4. SCISSOR ARMS INSTALLATION - 2646ES/3246ES (CONTINUED)

ITEM #	PART NUMBER	QTY.	DESCRIPTION	REV.
51	0200820	1	Arm - Upper Mid Outboard (Left Side)	
52	1180380	2	Carrier, Cable	
53	4812000	4	Flatwasher M10	
54	4071094	A/R	Shim, Spacer	
55	3423170	1	Pin	
56	3291007	1	Locknut M10	
			— — — — — — — — — — —	
	2902475	1	Scissor Arm Kit - 2646ES/3246ES (Includes Items 1-10,17,18,36, 49,51 & 52)	L
		Ref.	**SCISSOR ARMS INSTALLATIONS - 2646ES/3246ES**	
	0274879	Ref.	**2646ES with Standard Hydraulic Oil**	D
	0275695	Ref.	**2646ES with Biodegradeable Hydraulic Oil**	C
	0274881	Ref.	**3246ES with Standard Hydraulic Oil**	D
	0275696	Ref.	**3246ES with Biodegradeable Hydraulic Oil**	C
101	Not Used			
102	0701022	2	Bolt M10 x 70mm	
103	Not Used			
104	3200454	1	Mount, Switch	
105	3291005	2	Locknut M10	
106	Not Used			
107	3340957	2	Pad, Slide	
108	3423255	1	Pin, Sensor	
109 to 110	Not Used			
111	4191706	3	Screw M6 x 12mm	
112 to 113	Not Used			
114	1001092354	1	Switch, Rotary Angle Sensor (was p/n 4360526)	
115	1061034	1	Cable, Manual Descent (Not Shown)	
	7020218	1	T-Handle (with 1/4”-20 Threads)	
	70001878	1	T-Handle (with 5mm Threads)	
116	3321402	1	Nut, Jam 1/4”-28NF (Not Shown)	
117	4160078	1	Spring, Compression (Not Shown)	
118	4420070	A/R	Tape, Anti-Skid (3 Pcs 41mm X 279mm Each)	
119	4420080	A/R	Tape, Anti-Skid (1 Pc 60mm X 279mm) (Not Shown - Located on Bottom Step - Part of Frame)	

FIGURE 3-4. SCISSOR ARMS INSTALLATION - 2646ES/3246ES (CONTINUED)

ITEM #	PART NUMBER	QTY.	DESCRIPTION	REV.

SECTION 4
PLATFORM

FIGURE 4-1. PLATFORM INSTALLATION

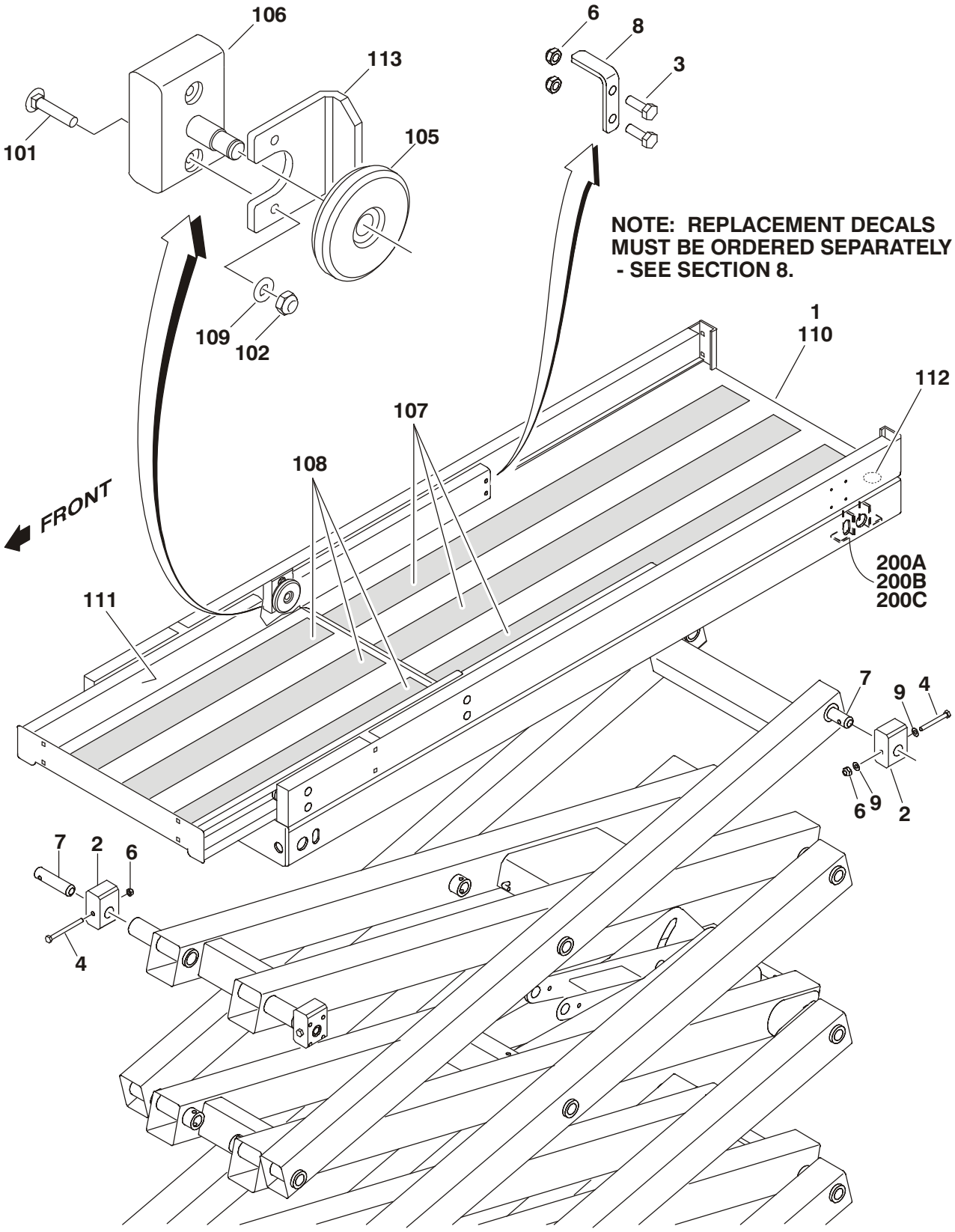

FIGURE 4-1. PLATFORM INSTALLATION

ITEM #	PART NUMBER	QTY.	DESCRIPTION	REV.
		Ref.	**PLATFORM INSTALLATIONS**	
		Ref.	**All Specs Except CE & Japanese Specs**	
	0274817	Ref.	**1930ES (Original Equipment)**	E
	1001134933	Ref.	**1930ES (Service Replacement)**	A
	0274991	Ref.	**2030ES/2630ES**	C
	0274930	Ref.	**2646ES/3246ES**	B
		Ref.	**CE & Japanese Specs Only**	
	0275029	Ref.	**1930ES**	F
	0274992	Ref.	**2030ES/2630ES**	C
	0274931	Ref.	**2646ES/3246ES**	B
		Ref.	**Note: All versions are available on ANSI Export & Australian Specs.**	
1		1	Platform Assembly (See Items 101-113 for Breakdown):	
	Use 1001134934		1930ES (Service Replacement) (Original Equipment was p/n 0274818)	
	0274971		2030ES/2630ES	
	0274929		2646ES/3246ES	
2		A/R	Block, Slide Options:	
	3340976	2	1930ES (Front Block)	
	3340965	2	1930ES (Rear Block)	
	1001134951	2	1930ES (Spacer Sleeve Used with Rear Block) (Service Replacement Platforms Only)	
	0561520	4	2030ES/2630ES/2646ES/3246ES	
3	3900351	4	Bolt M10 x 30mm	
4		A/R	Bolt M10 Options:	
	0701022	2	70mm Length (Front Slide Block - 1930ES)	
	0701027	2	100mm Length (Rear Slide Block - 1930ES) (was p/n 0701026 - 90mm Length)	
	0701029	2	120mm Length (Rear Slide Block - 1930ES) (Service Replacement Platform Only)	
	0701024	2	80mm Length (Front Slide Block - 2030ES/2630ES/2646ES/ 3246ES)	
	0701027	2	100mm Length (Rear Slide Block - 2030ES/2630ES/2646ES/ 3246ES)	
5	Not Used			
6	3291005	8	Locknut M10	
7		4	Pin Options:	
	3423049		All Machines except CE & Japanese Specs	
	See Note		CE & Japanese Spec Machines **(Note: Refer to JLG Supplement p/n 3124288)**	
8	3574067	2	Plate, Extension Stop	
9	4812000	4	Flatwasher M10	

FIGURE 4-1. PLATFORM INSTALLATION (CONTINUED)

ITEM #	PART NUMBER	QTY.	DESCRIPTION	REV.
		Ref.	**PLATFORM ASSEMBLY**	
	0274818	Ref.	**1930ES (Original Equipment)**	B
	1001134934	Ref.	**1930ES (Service Replacement)**	A
	0274971	Ref.	**2030ES/2630ES**	C
	0274929	Ref.	**2646ES/3246ES**	B
101	0630565	8	Bolt, Carriage M10 x 50mm	
102	3291005	8	Locknut M10	
103 to 104	Not Used			
105	3860118	4	Roller	
106	4340914	4	Mount	
107		A/R	Tape, Anti-Skid Options:	
	4420071	3	1930ES	
	4420075	3	2030ES/2630ES	
	4420073	5	2646ES/3246ES	
108		A/R	Tape, Anti-Skid Options:	
	4420072	3	1930ES/2030ES/2630ES	
	4420074	5	2646ES/3246ES	
109	4812000	8	Flatwasher M10	
110		1	Platform Weldment Options:	
	Use 1001134935		1930ES (Service Replacement) (Original Equipment was p/n 3510888)	
	3510892		2030ES/2630ES	
	3510890		2646ES/3246ES	
111		1	Extension Weldment Options:	
	4846768		1930ES/2030ES/2630ES	
	4846764		2646ES/3246ES	
112	2540045	1	Grommet	
113	0903574	1	Bracket, Stop (Use with p/n 0274818, 0274971 & 1001134934 Platform Assemblies Only)	
		Ref.	**SLIDE BLOCK MOUNT REPAIR KITS**	
200		A/R	Fixed Mount Repair Kit (Kit includes components & instructions to repair weld cracks in fixed mounting block supports on aluminum platforms	
200A	2915241	1	1930ES Fixed Mount Repair Kit	
200B	2915240	1	2030ES/2630ES Fixed Mount Repair Kit	
200C	2915241	1	2646ES/3246ES Fixed Mount Repair Kit	

FIGURE 4-1. PLATFORM INSTALLATION (CONTINUED)

ITEM #	PART NUMBER	QTY.	DESCRIPTION	REV.

FIGURE 4-2.RAIL (FIXED) INSTALLATION - 1930ES

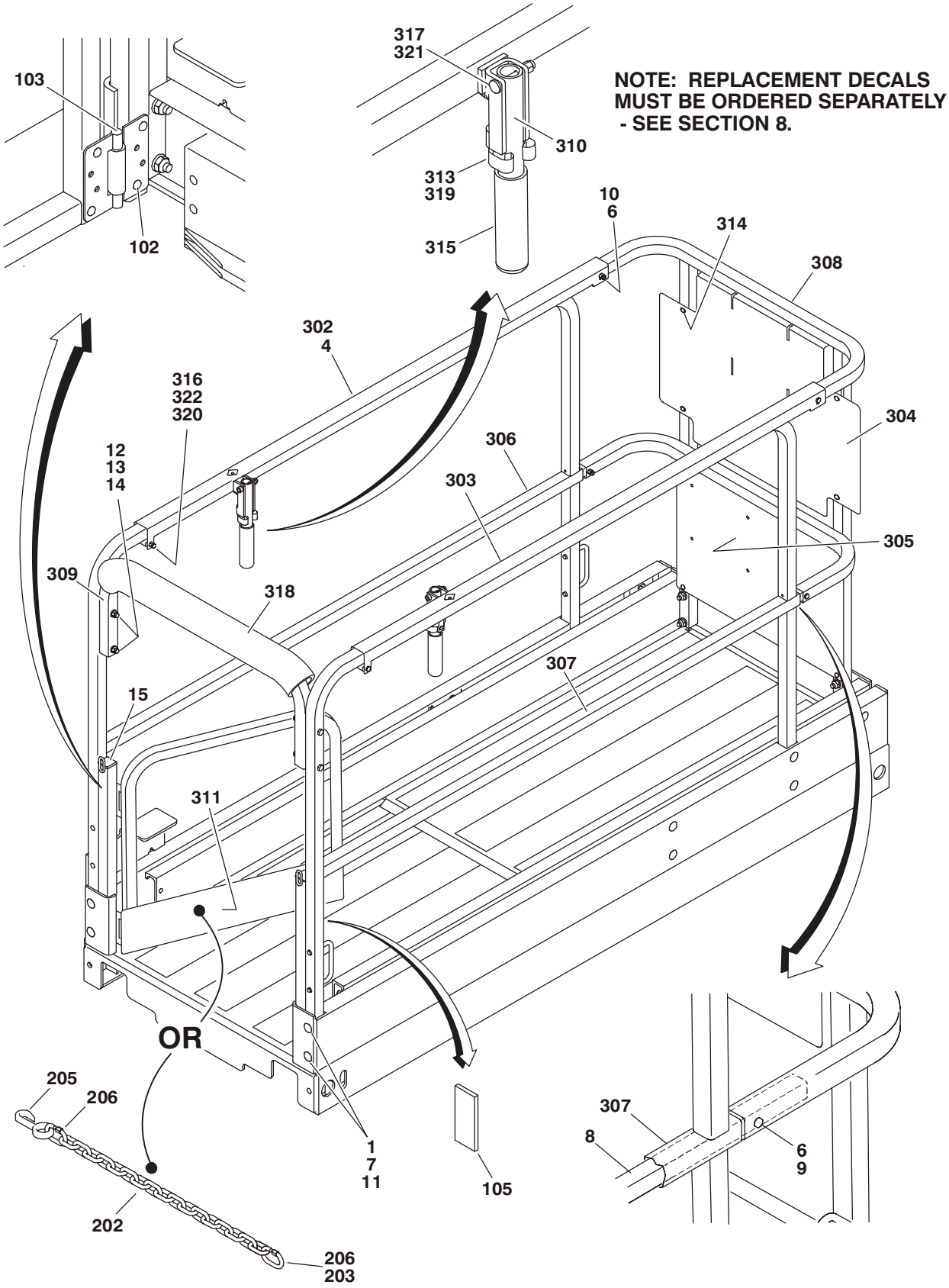

FIGURE 4-2. RAIL (FIXED) INSTALLATION - 1930ES

ITEM #	PART NUMBER	QTY.	DESCRIPTION	REV.
		Ref.	**RAIL INSTALLATION - 1930ES**	
	0274985	Ref.	**Rails with Gate Closure**	D
	0274816	Ref.	**Rails with Chain Closure**	D
1	0630565	12	Bolt, Carriage M10 x 55mm	
2 to 3	Not Used			
4		1	Rail Assembly Options (See Items 301-322 for Breakdown):	
	2902448		Rails with Gate Closure	
	2902496		Rails with Chain Closure	
5	Not Used			
6	3290606	4	Capnut M6	
7	3291005	12	Locknut M10	
8	3841716	2	Rod, Fiberglass	
9	4010616	2	Screw M6 x 40mm	
10	4010618	2	Screw M6 x 50mm	
11	4812000	12	Flatwasher M10	
12	0700823	4	Screw M8 x 75mm	
13	3290806	4	Capnut M8	
14	4811900	4	Flatwasher M8	
15	3520072	2	Cap-Plug	
	0274985	Ref.	**GATE CLOSURE COMPONENTS**	D
		Ref.	**Note: For Australian Spec Machines with magnetic gate latch, see Section 10.**	
101	Not Used			
102	2080040	8	Fastener, Huck	
103	2600281	2	Hinge	
104	Not Used			
105	3080007	1	Magnet, Gate	
	0274816	Ref.	**CHAIN CLOSURE COMPONENTS**	D
201	Not Used			
202	1260136	1.75ft/53cm	Chain (was 2ft/61cm)	
203	2820097	1.67ft/51cm	Cover, Chain (was 2ft/61cm)	
204	Not Used			
205	1001101076	1	Snap Latch Repair Kit (was p/n 2940064) (Includes Item 206)	
206	3010088	2	Link	
		Ref.	**RAIL ASSEMBLY - 1930ES**	
	2902496	Ref.	**Rails with Gate Closure**	L
	2902448	Ref.	**Rails with Chain Closure**	J
301	Not Used			
302	1271617	1	Rail, Slide (Left)	
303	1271618	1	Rail, Slide (Right)	
304	3576645	1	Plate, Billboard (Upper)	
305	3574184	1	Plate, Billboard (Lower)	

FIGURE 4-2. RAIL (FIXED) INSTALLATION - 1930ES (CONTINUED)

ITEM #	PART NUMBER	QTY.	DESCRIPTION	REV.
306	3641604	1	Rail, Side (Left)	
307	3641605	1	Rail, Side (Right)	
308	3641606	1	Rail, Extension Platform (Front)	
309	4569305	1	Rail (Rear)	
310	2560191	2	Handle, Extension	
311	4846723	1	Gate (2902496 Rail Assembly Only)	
312	Not Used			
313	1380132	2	Clip, Gripper	
314	2080040	8	Fastener, Huck	
315	2560088	2	Cover, Handle	
316	3290606	2	Capnut M6	
317	3290806	2	Capnut M8	
318	3340612	18in/46cm	Pad, Rail	
319	3820019	2	Rivet	
320	3860111	2	Roller	
321	3900345	2	Screw M8 x 45mm	
322	4010618	2	Screw M6 x 50mm	
			— — — — — — — — —	
	2902449		Rails Kit - 1930ES (Includes Items 302-310)	M

FIGURE 4-2. RAIL (FIXED) INSTALLATION - 1930ES (CONTINUED)

ITEM #	PART NUMBER	QTY.	DESCRIPTION	REV.

FIGURE 4-3.RAIL (FOLD-DOWN) INSTALLATION - 1930ES

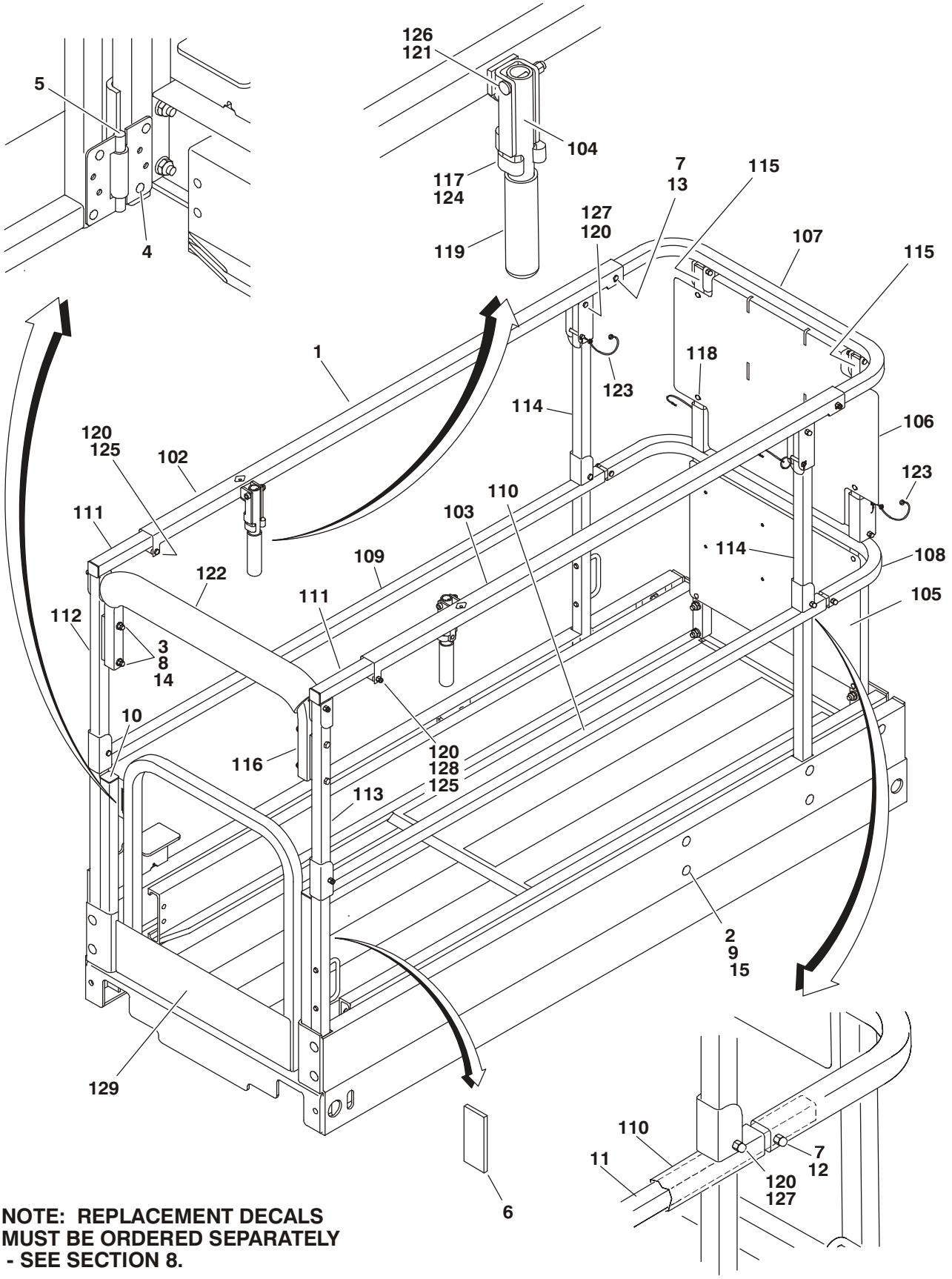

NOTE: REPLACEMENT DECALS MUST BE ORDERED SEPARATELY - SEE SECTION 8.

FIGURE 4-3. RAIL (FOLD-DOWN) INSTALLATION - 1930ES

ITEM #	PART NUMBER	QTY.	DESCRIPTION	REV.
		Ref.	**RAIL INSTALLATION - 1930ES**	
	0275429	Ref.	**Rails with Gate Closure**	D
1	2902535	1	Rail Assembly (See Items 101-129 for Breakdown)	
2	0630565	12	Bolt, Carriage M10 x 55mm	
3	0700825	4	Bolt M8 x 85mm	
4	2080040	8	Fastener, Huck	
5	2600281	2	Hinge	
6	3080007	1	Magnet, Gate	
7	3290606	4	Capnut M6	
8	3290806	4	Capnut M8	
9	3291005	12	Capnut M10	
10	3520072	4	Cap-Plug	
11	3841716	2	Tube, Slide (Mid)	
12	4010616	2	Screw M6 x 40mm	
13	4010618	2	Screw M6 x 50mm	
14	4811900	4	Flatwasher M8	
15	4812000	12	Flatwasher M10	
		Ref.	**RAIL ASSEMBLY - 1930ES**	
	2902535	Ref.	**Rails with Gate Closure**	I
101	Not Used			
102	1271617	1	Rail, Slide (Left)	
103	1271618	1	Rail, Slide (Right)	
104	2560191	2	Handle, Extension	
105	3574184	1	Plate, Billboard (Lower)	
106	3576932	1	Plate, Billboard (Upper)	
107	3641619	1	Rail (Front Upper)	
108	3641620	1	Rail (Front Mid)	
109	3641650	1	Rail (Left Lower Side)	
110	3641651	1	Rail (Right Lower Side)	
111	3641652	2	Rail (Both Upper Sides)	
112	3641653	1	Rail (Left Rear Upper)	
113	3641654	1	Rail (Right Rear Upper)	
114	4568667	2	Tube, Folding (Both Mid Side)	
115	4569404	2	Tube, Folding (Both Front)	
116	4569428	1	Rail (Rear)	
117	1380132	2	Clip, Gripper	
118	2080040	8	Fastener, Huck	
119	2560088	2	Cover, Handle	
120	3290606	14	Capnut M6	
121	3290806	2	Capnut M8	
122	3340612	18in/46cm	Pad, Rail	
123	3423278	4	Snap Pin/Lanyard Kit	
124	3820019	2	Rivet	
125	3860111	2	Roller	
126	3900345	2	Capscrew M8 x 45mm	
127	4010617	12	Screw M6 x 45mm	

FIGURE 4-3. RAIL (FOLD-DOWN) INSTALLATION - 1930ES (CONTINUED)

ITEM #	PART NUMBER	QTY.	DESCRIPTION	REV.
128	4010618	2	Screw M6 x 50mm	
129	4846723	1	Gate	
		Ref.	**Note: For Australian Spec Machines with magnetic gate latch, see Section 10.**	
			— — — — — — — — — —	
	2902536		Rails Kit - 1930ES (Includes Items 102-116)	K

FIGURE 4-3. RAIL (FOLD-DOWN) INSTALLATION - 1930ES (CONTINUED)

ITEM #	PART NUMBER	QTY.	DESCRIPTION	REV.

FIGURE 4-4.RAIL INSTALLATION - 2030ES/2630ES

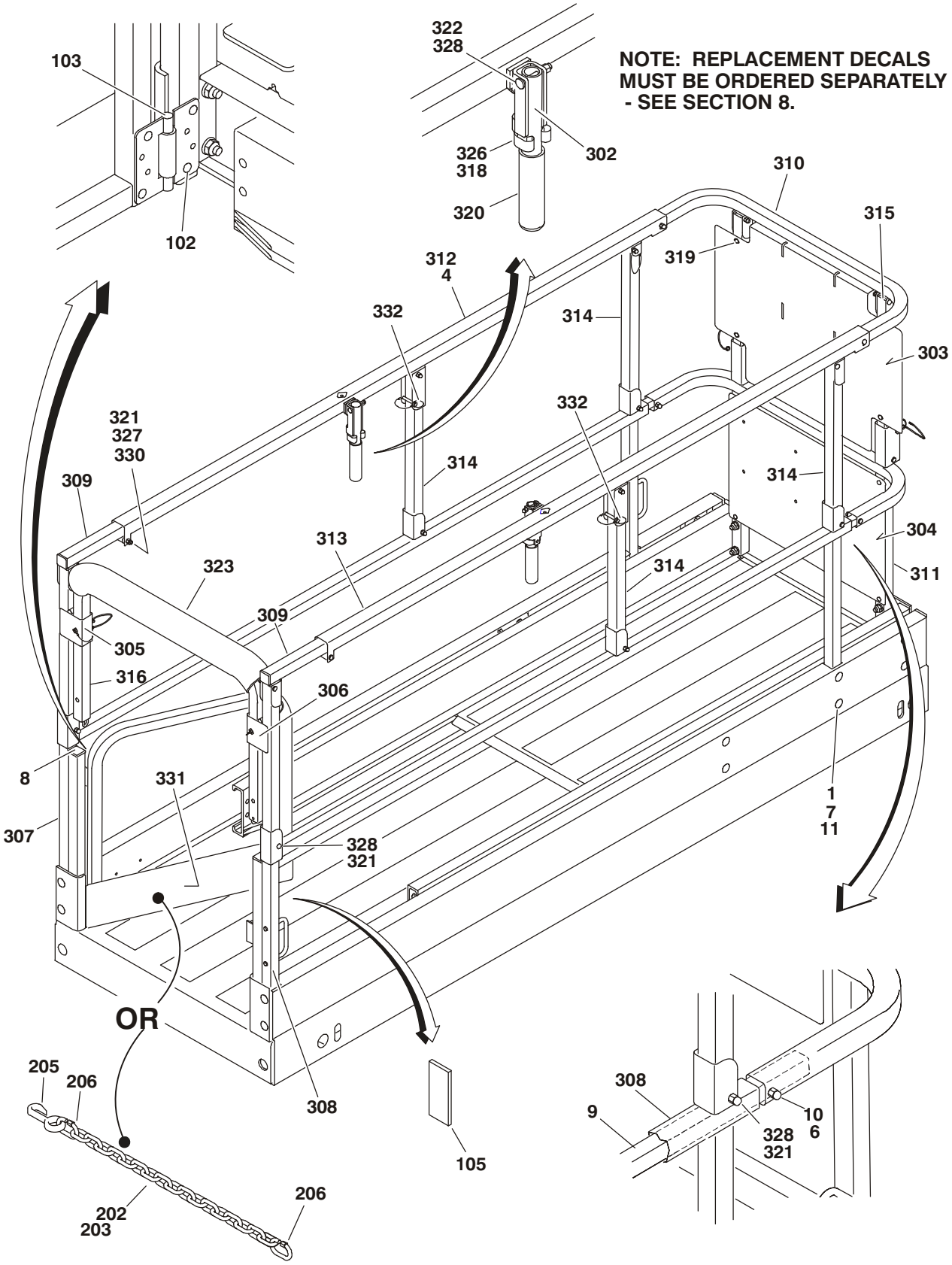

FIGURE 4-4. RAIL INSTALLATION - 2030ES/2630ES

ITEM #	PART NUMBER	QTY.	DESCRIPTION	REV.
		Ref.	**RAIL INSTALLATION - 2030ES/2630ES**	
	0274944	Ref.	**Rails with Gate Closure**	D
	0274943	Ref.	**Rails with Chain Closure**	D
1	0630565	12	Bolt, Carriage M10 x 55mm	
2 to 3	Not Used			
4		1	Rail Assembly Options (See Items 301-332 for Breakdown):	
	2902493		Rails with Gate Closure	
	2902492		Rails with Chain Closure	
5	Not Used			
6	3290606	2	Capnut M6	
7	3291005	12	Locknut M10	
8	3520072	4	Cap-Plug	
9	3841716	2	Rod, Fiberglass	
10	4010616	2	Screw M6 x 40mm	
11	4812000	12	Flatwasher M10	
	0274944	Ref.	**GATE CLOSURE COMPONENTS**	D
		Ref.	**Note: For Australian Spec Machines with magnetic gate latch, see Section 10.**	
101	Not Used			
102	2080040	8	Fastener, Huck	
103	2600281	2	Hinge	
104	Not Used			
105	3080007	1	Magnet, Gate	
	0274943	Ref.	**CHAIN CLOSURE COMPONENTS**	D
201	Not Used			
202	1260136	1.67ft/51cm	Chain (was 2ft/61cm)	
203	2820097	1.58ft/49cm	Cover, Chain (was 2ft/61cm)	
204	Not Used			
205	1001101076	1	Snap Latch Repair Kit (was p/n 2940064) (Includes Item 206)	
206	3010088	2	Link	
		Ref.	**RAIL ASSEMBLY - 2030ES/2630ES**	
	2902493	Ref.	**Rails with Gate Closure**	N
	2902492	Ref.	**Rails with Chain Closure**	N
301	Not Used			
302	2560191	2	Handle, Extension	
303	3576932	1	Plate, Billboard (Upper)	
304	3574184	1	Plate, Billboard (Lower)	
305	3641614	1	Rail, Upright (Left Rear)	
306	3641615	1	Rail, Upright (Right Rear)	
307	3641616	1	Rail, Side (Left)	
308	3641617	1	Rail, Side (Right)	
309	3641618	2	Rail, Platform (Top)	

FIGURE 4-4. RAIL INSTALLATION - 2030ES/2630ES (CONTINUED)

ITEM #	PART NUMBER	QTY.	DESCRIPTION	REV.
310	3641619	1	Rail, Extension (Top)	
311	3641620	1	Rail, Extension (Mid)	
312	3641621	1	Rail, Slide (Left)	
313	3641622	1	Rail, Slide (Right)	
314	4568667	4	Tube, Folding Post (Platform)	
315	4569404	2	Tube, Folding Post (Extension)	
316	4569319	1	Rail (Rear)	
317	Not Used			
318	1380132	2	Clip, Gripper	
319	2080040	10	Fastener, Huck	
320	2560088	2	Handle	
321	3290606	20	Capnut M6	
322	3290806	2	Capnut M8	
323	3340612	18in/46cm	Pad, Rail	
324 to 325	Not Used			
326	3820019	2	Rivet	
327	3860111	2	Roller	
328	3900345	2	Screw M8 x 45mm	
329	4010617	24	Screw M6 x 45mm	
330	4010618	2	Screw M6 x 50mm	
331	4846723	1	Gate (2902493 Assembly Only)	
332	3423278	4	Snap Pin/Lanyard Kit	
			— — — — — — — — — —	
	2902494		Rails Kit - 2030ES/2630ES (Includes Items 302-316)	Q

FIGURE 4-4. RAIL INSTALLATION - 2030ES/2630ES (CONTINUED)

ITEM #	PART NUMBER	QTY.	DESCRIPTION	REV.

FIGURE 4-5.RAIL INSTALLATION - 2646ES/3246ES

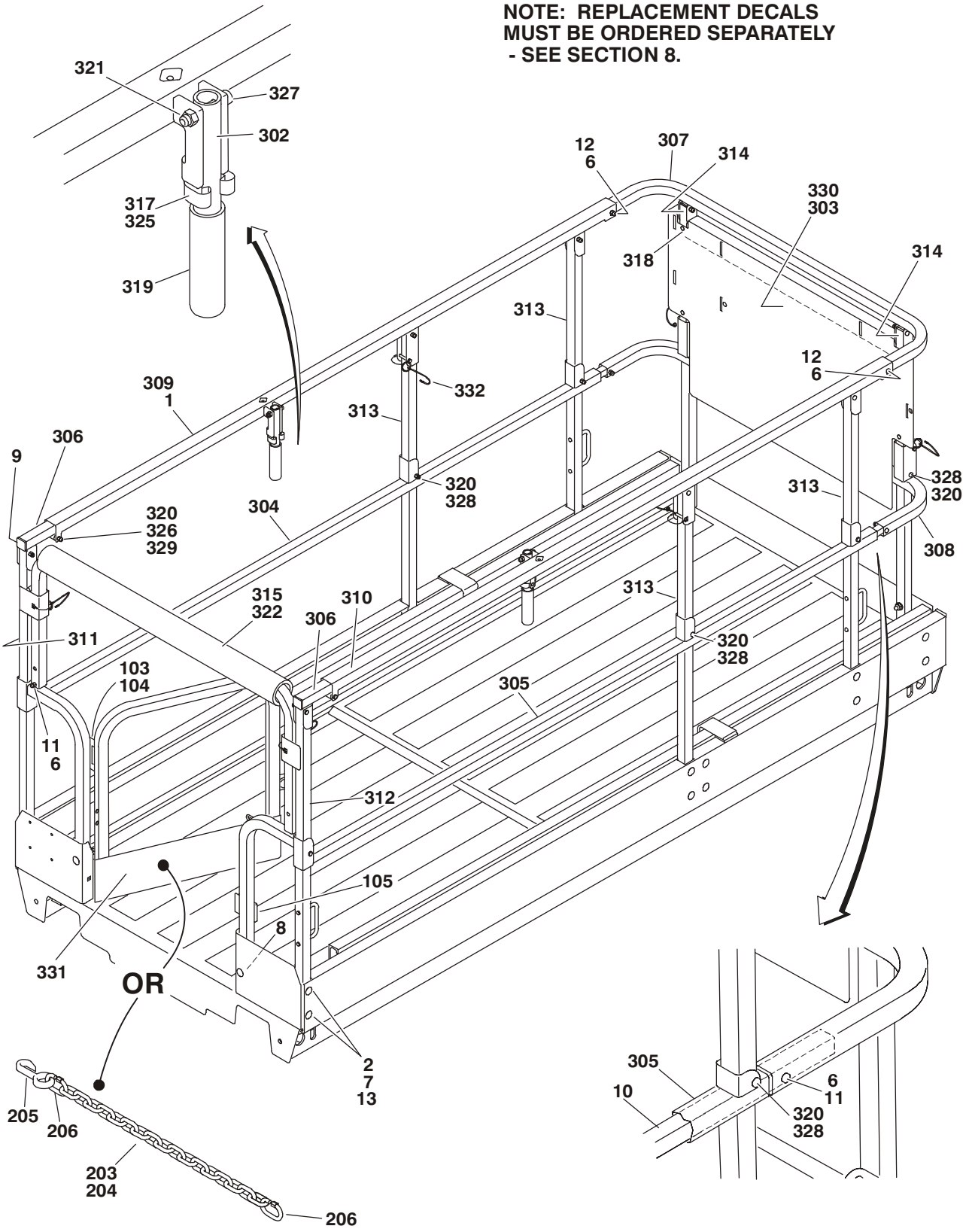

FIGURE 4-5. RAIL INSTALLATION - 2646ES/3246ES

ITEM #	PART NUMBER	QTY.	DESCRIPTION	REV.
		Ref.	**RAIL INSTALLATION - 2646ES/32646ES**	
	0274932	Ref.	**Rails with Gate Closure**	C
	0274933	Ref.	**Rails with Chain Closure**	C
1		1	Rail Assembly Options (See Items 301-332 for Breakdown):	
	2902490		Rails with Gate Closure	
	2902491		Rails with Chain Closure	
2	0630565	18	Bolt, Carriage M10 x 55mm	
3 to 5	Not Used			
6	3290606	2	Capnut M6	
7	3291005	18	Locknut M10	
8	3300477	2	Nut, Acorn	
9	3520072	2	Cap-Plug	
10	3841716	2	Rod, Fiberglass	
11	4010616	3	Screw M6 x 40mm	
12	4010618	3	Screw M6 x 50mm	
13	4812000	18	Flatwasher M10	
	0274932	Ref.	**GATE CLOSURE COMPONENTS**	C
		Ref.	**Note: For Australian Spec Machines with magnetic gate latch, see Section 10.**	
101 to 102	Not Used			
103	2080040	8	Fastener, Huck	
104	2600281	2	Hinge	
105	3080007	1	Magnet, Gate	
	0274933	Ref.	**CHAIN CLOSURE COMPONENTS**	C
201 to 202	Not Used			
203	1260136	1.75ft/53cm	Chain (was 2ft/61cm)	
204	2820097	1.67ft/51cm	Cover, Chain (was 2ft/61cm)	
205	1001101076	1	Snap Latch Repair Kit (was p/n 2940064) (Includes Item 206)	
206	3010088	2	Link	
		Ref.	**RAIL ASSEMBLY - 2030ES/2630ES**	
	2902490	Ref.	**Rails with Gate Closure**	M
	2902491	Ref.	**Rails with Chain Closure**	L
301	Not Used			
302	2560191	2	Handle, Extension	
303	3576646	1	Plate, Billboard	
304	3641607	1	Rail, Side (Left Lower)	
305	3641608	1	Rail, Side (Right Lower)	
306	3641609	2	Rail, Platform (Top)	
307	3641610	1	Rail, Extension (Top)	
308	3641611	1	Rail, Extension (Mid)	
309	3641612	1	Rail, Slide (Left)	
310	3641613	1	Rail, Slide (Right)	

FIGURE 4-5. RAIL INSTALLATION - 2646ES/3246ES (CONTINUED)

ITEM #	PART NUMBER	QTY.	DESCRIPTION	REV.
311	3641614	1	Rail, Side (Left Rear)	
312	3641615	1	Rail, Side (Right Rear)	
313	4568667	4	Tube, Folding Post (Platform)	
314	4569404	2	Tube, Folding Post (Extension)	
315	4569310	1	Rail (Rear)	
316	Not Used			
317	1380132	2	Clip, Gripper	
318	2080040	6	Fastener, Huck	
319	2560088	2	Handle	
320	3290606	18	Capnut M6	
321	3290806	2	Capnut M8	
322	3340612	18in/46cm	Pad, Rail	
323 to 324	Not Used			
325	3820019	2	Rivet	
326	3860111	2	Roller	
327	3900345	2	Screw M8 x 45mm	
328	4010617	24	Screw M6 x 45mm	
329	4010618	2	Screw M6 x 50mm	
330	4420037	A/R	Tape, Insulation	
331	4846723	1	Gate (2902490 Assembly Only)	
332	3423278	4	Snap Pin/Lanyard Kit	
			— — — — — — — — —	
	2902489		Rails Kit - 2646ES/3246ES (Includes Items 302-315)	N

FIGURE 4-5. RAIL INSTALLATION - 2646ES/3246ES (CONTINUED)

ITEM #	PART NUMBER	QTY.	DESCRIPTION	REV.
				J

FIGURE 4-6.PLATFORM CONSOLE BOX INSTALLATION

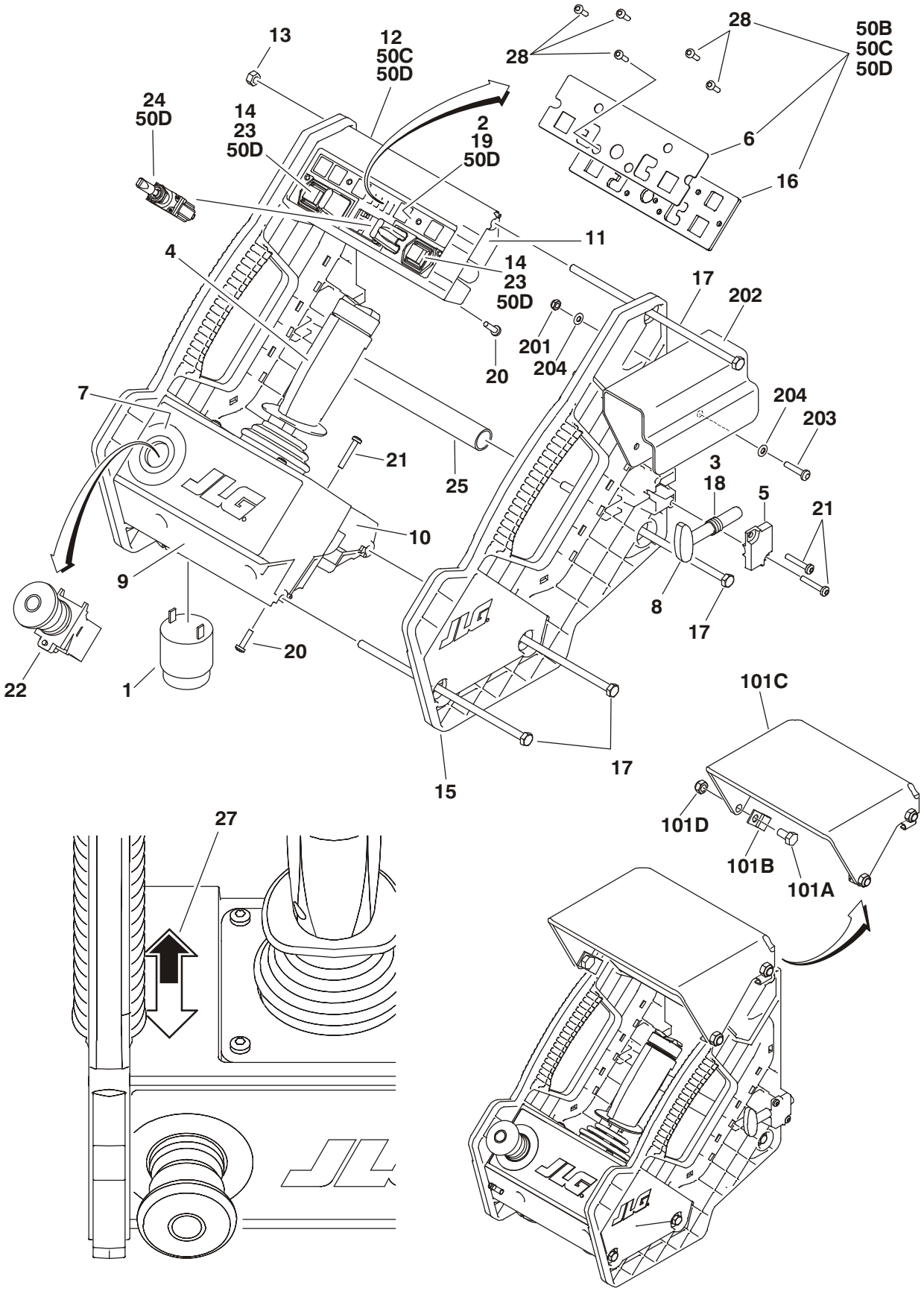

FIGURE 4-6. PLATFORM CONSOLE BOX INSTALLATION

ITEM #	PART NUMBER	QTY.	DESCRIPTION	REV.
		Ref.	**CONSOLE BOX ASSEMBLY**	
	1001091153	Ref.	**All Specs except Australian & CE Spec**	F
	1001091153	Ref.	**Australian Spec USA Built Machines S/N 0200198014 to S/N 0200211631 & China Built Machines S/N B200000100 to S/N B200007193**	F
	1001091154	Ref.	**Australian Spec USA Built Machines S/N 0200211631 to Present & China Built Machines S/N B200007193 to Present**	F
	1001091154	Ref.	**CE Spec**	F
1	0140011	1	Alarm	
2	Use Item 50D		Platform Box Control Module (was p/n 1600439)	
3	1380156	1	E-Clip	
4	Use 1001134438	1	Drive/Steer Controller Assembly (was p/n 1600402) (See Figure 4-7 for Breakdown)	
5	1671098	1	Latch	
6		1	Decal - Icon Options:	
	1001091272		All Specs except Australian & CE Spec	
	1001091272		Australian Spec USA Built Machines S/N 0200198014 to S/N 0200211631 & China Built Machines S/N B200000100 to S/N B200007193	
	1001091275		Australian Spec USA Built Machines S/N 0200211631 to Present & China Built Machines S/N B200007193 to Present	
	1001091275		CE Spec	
7	1705676	1	Decal - Emergency Stop Ring	
8	2560179	1	Handle, Latch	
9	1001091277	1	Housing, Joystick (Lower)	
10	1001091278	1	Mount, Joystick	
11	1001091279	1	Housing, Module Mounting (Lower) (was p/n 2760115)	
12	1001091280	1	Housing, Module Mounting (Upper)	
13	3300473	4	Nut M6	
14	3340968	2	Button (Includes Black Button Only)	
15	3380475	2	Panel, Side	
16	See Note	1	Plate, Decal **(Note: Use Items 50B, 50C or 50D)**	
17	3900333	4	Screw M6 x 190mm	
18	4160203	1	Spring, Compression	
19	4191306	5	Screw M3.5 x 12mm	
20	4191407	8	Screw M4 x 16mm	
21	4191409	6	Screw M4 x 25mm	
22	4360475	1	Switch, Emergency Stop	
	7020175	1	Cap	
	7020176	1	Block, Contact	
23	4360538	2	Strip, Switch & Membrane	
24	4360539	1	Switch, Toggle	
25	4568738	1	Tube, Spacer	
26	4922870	1	Harness, Platform Box (Not Shown - See Section 7 for Breakdown)	
27	1703819	1	Decal - Directional Arrow	
28	1001091396	6	Screw M3.5 x 12mm	
29 to 49	Not Used			

FIGURE 4-6. PLATFORM CONSOLE BOX INSTALLATION (CONTINUED)

ITEM #	PART NUMBER	QTY.	DESCRIPTION	REV.
50			Kit Options:	
50A	Not Used			
50B	1001091968	1	Decal Kit (Includes Items 6, 16 & 28) **Note: Two Item 6's are included in the kit - 1 for All Specs Except CE and 1 for CE Specs. For Australian Spec refer to Item 6 for decal usage. Use decal required for applicable spec. Dispose of the decal not used.**	A
50C	1001091393	1	Decal & Housing Kit (Includes Items 6, 12, 16 & 28) **Note: Two Item 6's are included in the kit - 1 for All Specs Except CE and 1 for CE Specs. For Australian Spec refer to Item 6 for decal usage. Use decal required for applicable spec. Dispose of the decal not used.**	C
50D	1001091965	1	Decal, Housing & PC Board Kit (Includes Items 2, 6, 12, 14, 16, 19, 23, 24 & 28) **Note: Two Item 6's are included in the kit - 1 for All Specs Except CE and 1 for CE Specs. For Australian Spec refer to Item 6 for decal usage. Use decal required for applicable spec. Dispose of the decal not used.**	C
	0272878	Ref.	**ANTI-VANDELISM PACKAGE INSTALLATION (NOT SHOWN)**	A
	1671131	1	Cover, Lockable Platform Console Box	
		Ref.	**PLATFORM BOX COVER INSTALLATION**	
	Use 1001118216	Ref.	**USA Built Machines S/N0200152825 to S/N0200202718 & All Belgium Machines & China Machines S/N B200000100 to S/N B200001526 (was p/n 0273841)**	A/C
	1001118216	Ref.	**USA Built Machines S/N0200202718 to 0200198014**	A
101			Kit, Platform Box Shield Options:	
	Use 1001118215		USA Built Machines S/N0200152825 to S/N0200202718 & All Belgium Machines & China Machines S/N B200000100 to S/N B200001526 (was p/n 0273841)	
	1001118215		USA Built Machines S/N0200202718 to 0200198014	
101A	0760808	4	Bolt M8 x 16mm	
101B	1380159	4	Clip, Cover Mounting	
101C	Use Item 101	1	Cover, Platform Box	
101D	3290805	4	Locknut M8	
	0274386	Ref.	**PLATFORM BOX HANGER INSTALLATION (OPTIONAL)**	B
201	3290405	2	Locknut M4	
202	3575794	1	Plate, Bracket	
203	3900338	2	Screw M4 x 20mm	
204	4811400	4	Flatwasher M4	

FIGURE 4-6. PLATFORM CONSOLE BOX INSTALLATION (CONTINUED)

ITEM #	PART NUMBER	QTY.	DESCRIPTION	REV.

FIGURE 4-7. DRIVE/STEER CONTROLLER ASSEMBLY

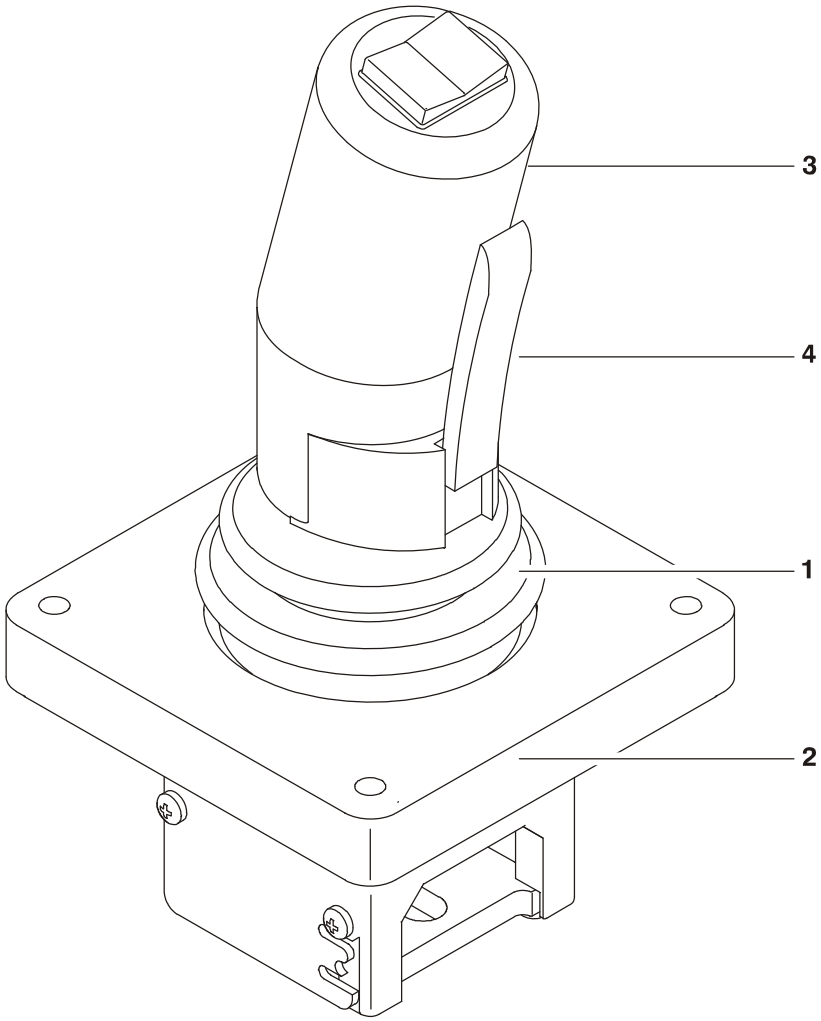

FIGURE 4-7. DRIVE/STEER CONTROLLER ASSEMBLY

ITEM #	PART NUMBER	QTY.	DESCRIPTION	REV.
	See Note	1	**DRIVE/STEER CONTROLLER ASSEMBLY**	A
		Ref.	**Note: Use p/n 1001134438 as replacement (was p/n 1600402).**	
1	70001250	1	Boot, Panel	
2	70001252	1	Gasket, Mounting	
	70001251	1	Bezel, Mounting	
3	70003650	1	Handle Repair Kit (Includes handle gasket, item#4 push button and item #4 lever installed in front handle half, back handle half, top actuator, boot and hardware.)	
	70000084	1	Cap, Rubber	
	70000082	1	Microswitch	
	7027766	1	Ring, Retaining	
	7027365	1	Actuator, Handle	
	70001253	1	Gasket, Handle	
	70000683	4	Washer, Neoprene	
	70000685	2	Spacer, Plastic	
	70000686	2	Screw (Top)	
	70000684	2	Screw (Bottom)	
4	7027367	1	Switch, Push Button	
	7027765	1	Lever, Enable	

FIGURE 4-7. DRIVE/STEER CONTROLLER ASSEMBLY (CONTINUED)

ITEM #	PART NUMBER	QTY.	DESCRIPTION	REV.

SECTION 5
CYLINDER

FIGURE 5-1.LIFT CYLINDER ASSEMBLY

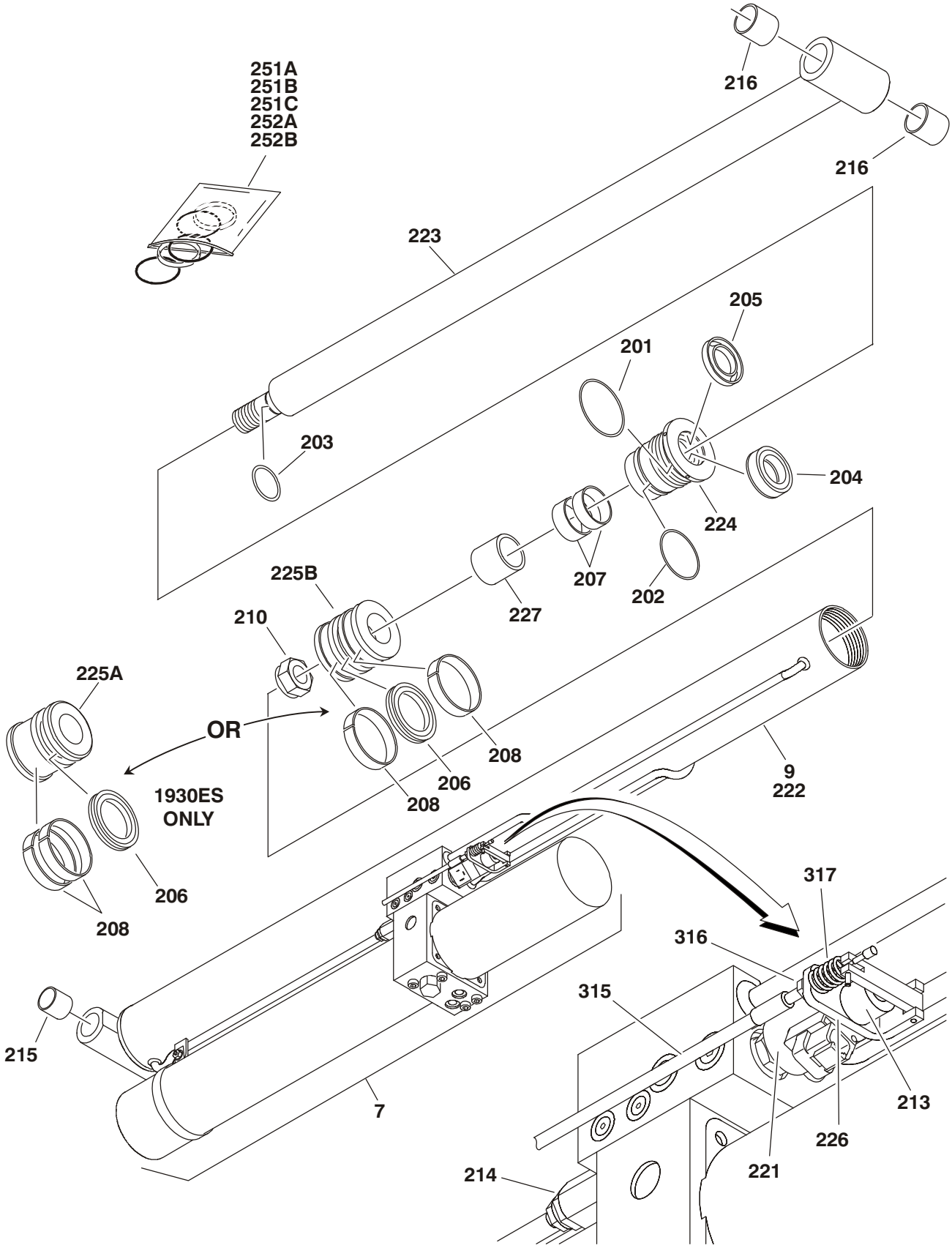

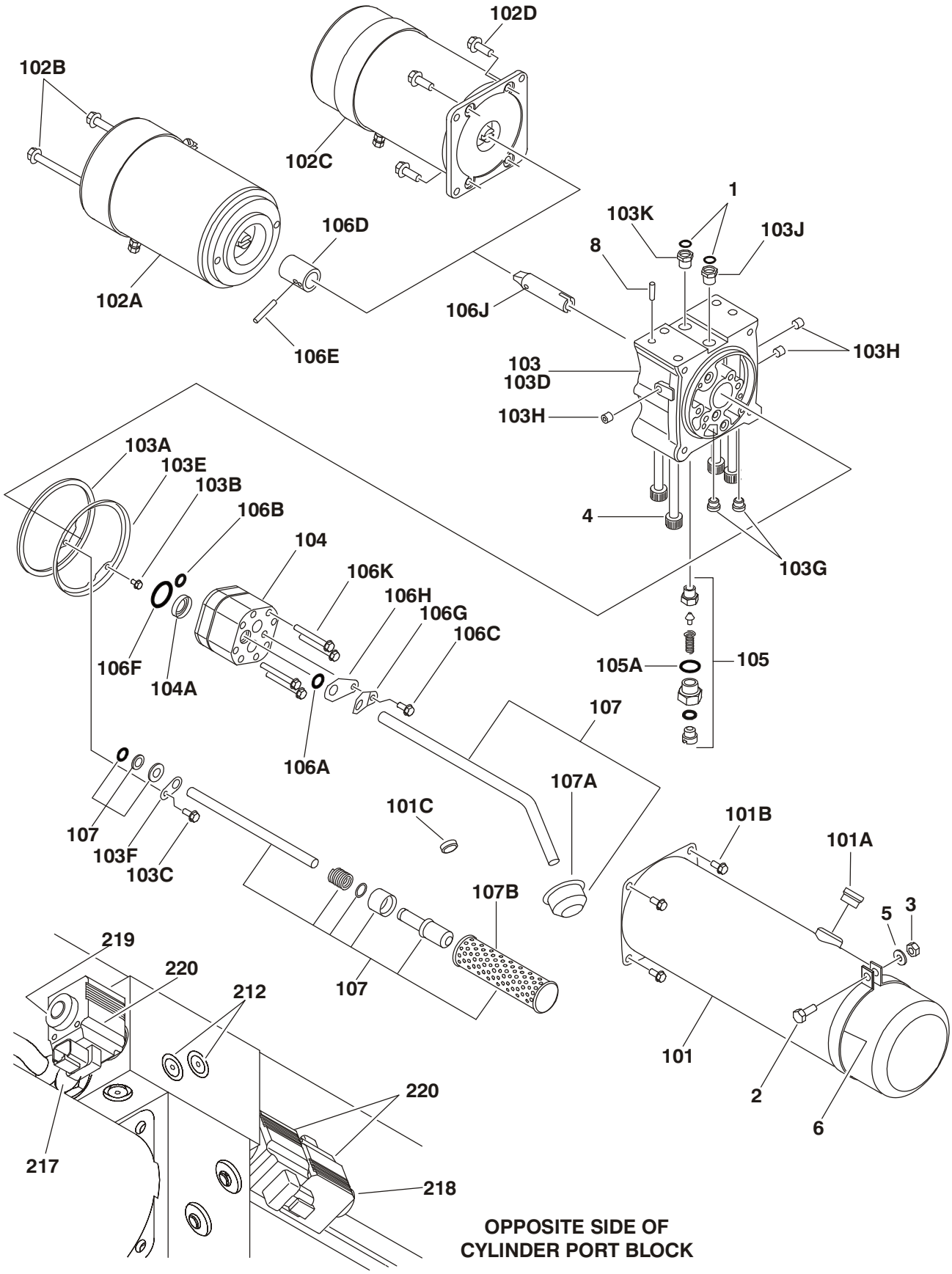
102D
102B
102C
102A
106D
106E
106J
1
103K
103J
8
103H
103
103D
103H
4
103G
103A
103E
103B
106B
104
106K
106H
106G
106C
106F
104A
106A
105A
105
107
107A
101C
107
103F
103C
107B
107
101B
101A
5
3
2
6
101
219
220
212
217
220
218
OPPOSITE SIDE OF
CYLINDER PORT BLOCK

FIGURE 5-1. LIFT CYLINDER ASSEMBLY

ITEM #	PART NUMBER	QTY.	DESCRIPTION	REV.
		Ref.	**LIFT CYLINDER ASSEMBLY**	
	1684484	Ref.	**1930ES with Standard Hydraulic Oil**	D
	1684526	Ref.	**1930ES with Biodegradeable Hydraulic Oil**	C
	1684487	Ref.	**2030ES with Standard Hydraulic Oil**	D
	1684527	Ref.	**2030ES with Biodegradeable Hydraulic Oil**	C
	1684488	Ref.	**2630ES with Standard Hydraulic Oil**	D
	1684528	Ref.	**2630ES with Biodegradeable Hydraulic Oil**	C
	1684489	Ref.	**2646ES with Standard Hydraulic Oil**	D
	1684529	Ref.	**2646ES with Biodegradeable Hydraulic Oil**	C
	1684490	Ref.	**3246ES with Standard Hydraulic Oil**	D
	1684530	Ref.	**3246ES with Biodegradeable Hydraulic Oil**	C
1	7023577	2	O-Ring	
2	Not Available	1	Capscrew (All except 1930ES Models)	
3	Not Available	1	Locknut (All except 1930ES Models)	
4	7023589	4	Capscrew	
5	Not Available	2	Flatwasher (All except 1930ES Models)	
6	7023539	1	Clamp (All except 1930ES Models)	
7		1	Power Pack Assembly - Complete Options (See Items 101-107B for Breakdown):	
	7023558		1930ES	
	7023549		2030ES	
	7023568		2630ES	
	7023557		2646ES	
	7023535		3246ES	
8	70003646	2	Pin, Dowel	
	70003645	2	Rollpin	
9	Not Available	1	Cylinder Assembly Only (See Items 201-227 for Breakdown)	
		1	**POWER PACK ASSEMBLY - COMPLETE**	
	7023558	Ref.	**1930ES (1684484/1684526 Cylinders)**	
	7023549	Ref.	**2030ES (1684487/1684527 Cylinders)**	
	7023568	Ref.	**2630ES (1684488/1684528 Cylinders)**	
	7023557	Ref.	**2646ES (1684489/1684529 Cylinders)**	
	7023535	Ref.	**3246ES (1684490/1684530 Cylinders)**	
101		1	Tank Kit Options (Note: Includes Tank & Item 101A-101C):	
	7023569		1930ES	
	7023587		2030ES	
	7023585		2630ES	
	7023578		2646ES	
	7023583		3246ES	
101A	7023593	1	Plug, Fill	
101B	Use Item 101	4	Screw	
101C	Use Item 101	1	Magnet	

FIGURE 5-1. LIFT CYLINDER ASSEMBLY (CONTINUED)

ITEM #	PART NUMBER	QTY.	DESCRIPTION	REV.
102		A/R	Motor Options:	
102A	7023570	1	1930ES/2030ES/2630ES Motor	
	70000658	1	Brush Kit - 7023570 Motor	
102B	Not Available	2	Screw	
102C	7023579	1	2646ES/3246ES Motor	
	70000659	1	Brush Kit - 7023579 Motor	
102D	Not Available	4	Screw	
	Not Available	4	Washer	
103	7023571	1	Adapter	
103	7023571	1	Adapter Kit	
103A	70000335	1	O-Ring	
103B	Use Item 103	1	Screw	
103C	Use Item 103	1	Screw	
103D	Use Item 103	1	Adapter	
103E	See Note	1	Seal **(Note: Use Item 252A or 252B)**	
103F	Use Item 103	1	Retainer	
103G	2220883	2	Plug	
103H	Use Item 103	3	Plug	
103J	Use Item 103	1	Breather 9/16”- 12UNC	
103K	Use Item 103	1	Breather 9/16”- 18SAE	
104		1	Pump Options: **Note: Shaft Seal is only Repair Part Available. No Other Service Parts Available - Replace Complete Pump.**	
	7023572		1930ES/2630ES Pump	
	7023588		2030ES Pump	
	7023580		2646ES/3246ES Pump	
104A	See Note	1	Seal, Shaft **(Note: Use Item 252A or 252B)**	
105	7023573	1	Relief Valve Assembly	
105A	7023591	1	Sealing Washer	
106		A/R	Power Pack Miscellaneous Service Parts	
106A	Not Available	1	Seal	
106B	See Note	1	Seal **(Note: Use Item 252A or 252B)**	
106C	Not Available	1	Screw	
106D	Use Item 106J	1	Sleeve (1930ES/2030ES/2630ES Only)	
106E	Use Item 106J	1	Rollpin (1930ES/2030ES/2630ES Only)	
106F	See Note	1	Seal **(Note: Use Item 252A or 252B)**	
106G	Not Available	1	Tab, Locking	
106H	Not Available	1	Retainer, Tube	
106J		1	Coupler Kit Options:	
	7023574		1930ES/2030ES/2630ES (Includes Items 106D & 106E)	
	7023581		2646ES/3246ES	
106K	Not Available	4	Screw	
107		1	Tube Kit Options:	
	7023575		1930ES	
	7023586		2030ES/2630ES	
	7023582		2646ES	
	7023584		3246ES	
107A	Use Item 107	1	Strainer	
107B	7023576	1	Filter Element (Includes Seal)	

FIGURE 5-1. LIFT CYLINDER ASSEMBLY (CONTINUED)

ITEM #	PART NUMBER	QTY.	DESCRIPTION	REV.
		Ref.	**CYLINDER ASSEMBLY ONLY COMPONENTS**	
201	See Note	1	O-Ring **(Note: Use Item 251A or 251B)**	
202	See Note	1	O-Ring **(Note: Use Item 251A or 251B)**	
203	See Note	2	O-Ring **(Note: Use Item 251A or 251B)**	
204	See Note	1	Seal **(Note: Use Item 251A or 251B)**	
205	See Note	1	Wiper **(Note: Use Item 251A or 251B)**	
206	See Note	1	Seal **(Note: Use Item 251A or 251B)** **(Note: This is a 3 piece seal. Assembly may be required)**	
207	See Note	2	Ring, Wear **(Note: Use Item 251A or 251B)**	
208	See Note	2	Ring, Wear **(Note: Use Item 251A or 251B)**	
209	Not Used			
210	Not Available	1	Locknut	
211	2220883	4	Plug, Steel (SAE #4) (Not Shown)	
212	2220882	8	Plug, Steel (SAE #3)	
213	7023543	1	Valve, Proportional (Lift Down)	
214	7023542	1	Valve, Relief (Steer)	
215		2	Bushing Options:	
	0962257		1930ES	
	0962006		2646ES/3246ES	
216		2	Bushing Options:	
	0962257		1930ES	
	0962181		2646ES/3246ES	
217	7023538	1	Valve, Check	
218	7023537	1	Directional Control Valve (Steer)	
219	7023536	1	Directional Control Valve (Lift Up)	
220	70000798	3	Coil (Steer & Lift Up)	
221	70000799	1	Coil (Lift Down)	
222		1	Barrel Options:	
	7023553		1930ES	
	7023548		2030ES/2630ES	
	7023556		2646ES	
	7023534		3246ES	
223		1	Rod Options:	
	7023552		1930ES	
	7023547		2030ES/2630ES	
	7023533		2646ES/3246ES	
224		1	Head Options:	
	7023551		1930ES	
	7023546		2030ES/2630ES	
	7023532		2646ES/3246ES	
225		1	Piston Options:	
225A	7023550		1930ES	
225B	7023545		2030ES/2630ES	
225B	7023531		2646ES/3246ES	
226	7023530		Emergency Release Assembly	
227		A/R	Spacer Options:	
	Not Required	0	1930ES/2646ES	
	7023529	1	3246ES	

FIGURE 5-1. LIFT CYLINDER ASSEMBLY (CONTINUED)

ITEM #	PART NUMBER	QTY.	DESCRIPTION	REV.
		Ref.	**SEAL KIT OPTIONS**	
251		1	Seal Kit - Cylinder Options (Includes Items 201-208):	
251A	7023554		1930ES	
251B	7023544		2030ES/2630ES	
251C	7023528		2646ES/3246ES	
252		1	Seal Kit - Reservoir/Pump Options (Includes 103A, 103E, 104A, 106B & 106F):	
252A	70001709		1930ES/2030ES/2630ES	
252B	70001982		2646ES/3246ES	
		Ref.	**MANUAL DESCENT COMPONENTS**	
	0274874	Ref.	**1930ES with Standard Hydraulic Oil**	D
	0275692	Ref.	**1930ES with Biogradeable Hydraulic Oil**	B
	0275016	Ref.	**2030ES with Standard Hydraulic Oil**	D
	0275693	Ref.	**2030ES with Biogradeable Hydraulic Oil**	B
	0275017	Ref.	**2630ES with Standard Hydraulic Oil**	D
	0275694	Ref.	**2630ES with Biogradeable Hydraulic Oil**	B
	0274879	Ref.	**2646ES with Standard Hydraulic Oil**	C
	0275695	Ref.	**2646ES with Biogradeable Hydraulic Oil**	B
	0274881	Ref.	**3246ES with Standard Hydraulic Oil**	C
	0275696	Ref.	**3246ES with Biogradeable Hydraulic Oil**	B
301 to 314	Not Used			
315		1	Cable, Pull Options:	
	1061036		1930ES - 9ft/2.74m Length	
	1061034		2030ES/2630ES - 12.5ft/3.81m Length	
	1061034		2646ES/3246ES - 12.5ft/3.81m Length	
	7020218	1	T-Handle (with 1/4”-20 Threads)	
	70001878	1	T-Handle (with 5mm Threads)	
316	3321402	1	Nut, Jam 1/4”-18NF	
317	4160078	1	Spring	

FIGURE 5-2. STEER CYLINDER ASSEMBLY

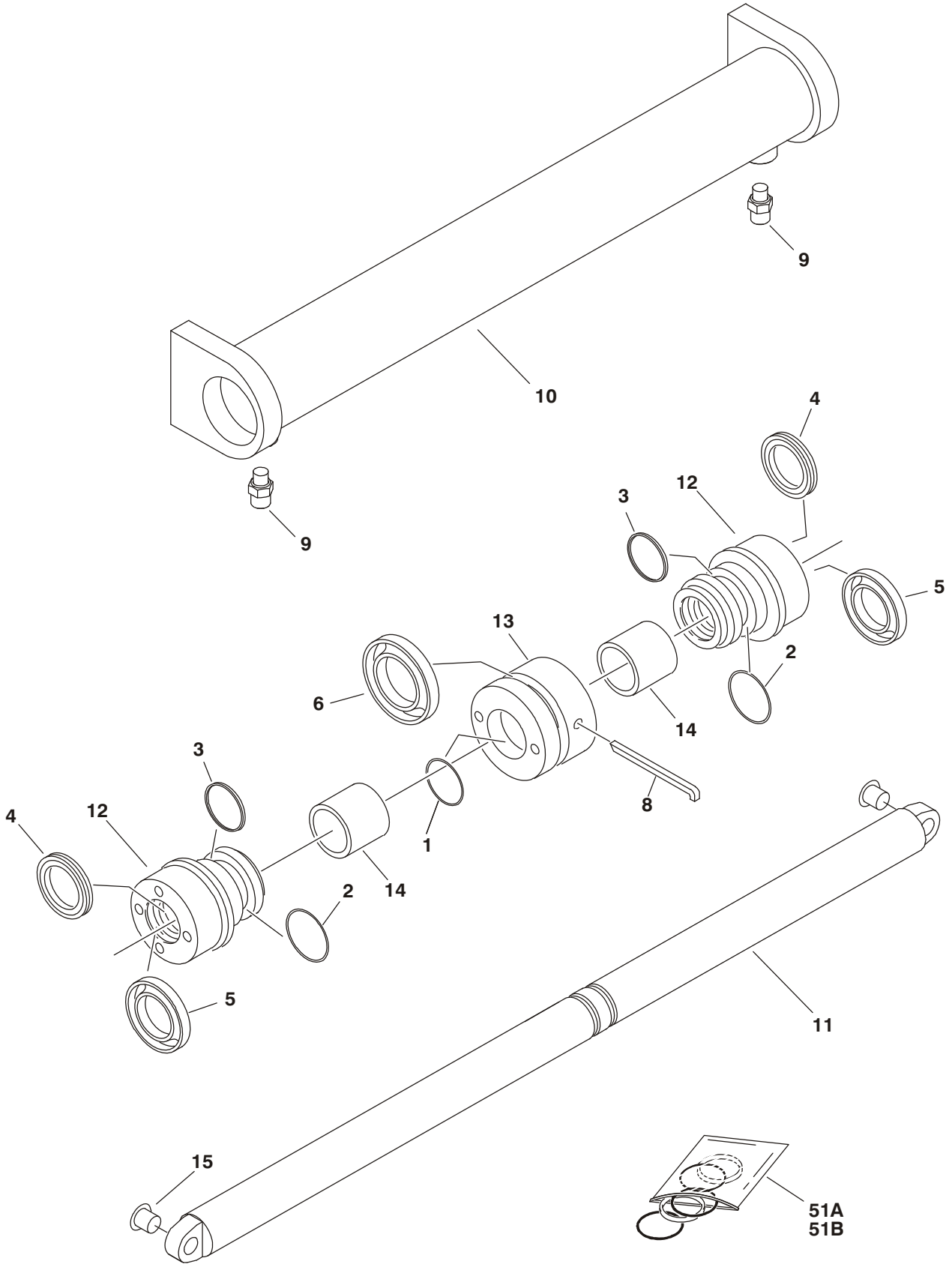

FIGURE 5-2. STEER CYLINDER ASSEMBLY

ITEM #	PART NUMBER	QTY.	DESCRIPTION	REV.
		Ref.	**STEER CYLINDER ASSEMBLY**	
	1684237	Ref.	**1930ES/2030ES/2630ES**	D
	1684456	Ref.	**2646ES/3246ES**	A
1	See Note	1	O-Ring **(Note: Use Item 51A or 51B)**	
2	See Note	2	O-Ring **(Note: Use Item 51A or 51B)**	
3	See Note	2	Ring, Back-Up **(Note: Use Item 51A or 51B)**	
4	See Note	2	Seal **(Note: Use Item 51A or 51B)**	
5	See Note	2	Wiper **(Note: Use Item 51A or 51B)**	
6	See Note	1	Seal **(Note: Use Item 51A or 51B)**	
7	Not Used			
8	7023564	1	Ring, Retaining	
9	2110404	2	Fitting, Straight Adapter	
10		1	Tube Assembly Options:	
	7023563		1930ES/2030ES/2630ES	
	70000108		2646ES/3246ES	
11		1	Rod Options:	
	7023562		1930ES/2030ES/2630ES	
	70000110		2646ES/3246ES	
12	7023561	2	Head	
13	7023560	1	Piston	
14			Spacer Options:	
	Not Required	0	1930ES/2030ES/2630ES	
	7023565	2	2646ES/3246ES	
15	0440259	2	Bushing	
16 to 50	Not Used			
			— — — — — — — — —	
51		1	Seal Kit - Cylinder Options (Includes Items 1-6):	
51A	7023559		1930ES/2030ES/2630ES	
51B	70000107		2646ES/3246ES	

FIGURE 5-2. STEER CYLINDER ASSEMBLY (CONTINUED)

ITEM #	PART NUMBER	QTY.	DESCRIPTION	REV.

SECTION 6
HYDRAULIC

FIGURE 6-1.HYDRAULIC DIAGRAM

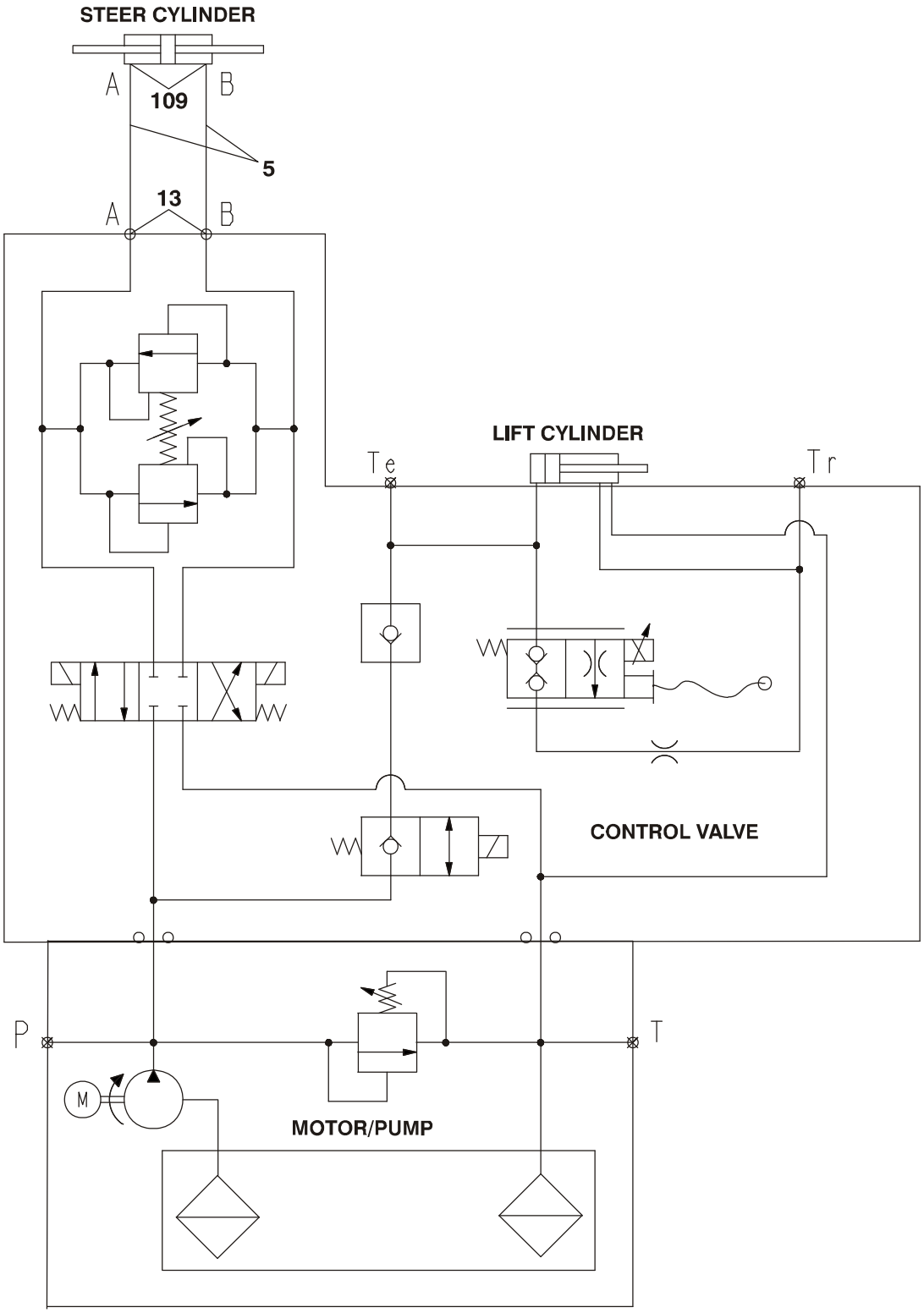

FIGURE 6-1. HYDRAULIC DIAGRAM

ITEM #	PART NUMBER	QTY.	DESCRIPTION	REV.
		Ref.	**HYDRAULIC COMPONENTS**	
	0272371	Ref.	**Steer Hydraulics (1930ES)**	G
	0273227	Ref.	**Steer Hydraulics (2030ES/2630ES)**	D
	0274546	Ref.	**Steer Hydraulics (2646ES/3246ES)**	B
	2792599	Ref.	**Hydraulic Schematic**	D
1 to 4	Not Used			
5		2	Hose Options:	
	2755056		1930ES	
	2755061		2030ES/2630ES	
	2753883		2646ES/3246ES	
6 to 12	Not Used			
13	2110404	2	Fitting, Straight	
		Ref.	**STEER CYLINDER ASSEMBLY**	
	1684237	Ref.	**1930ES/2030ES/2630ES**	D
	1684456	Ref.	**2646ES/3246ES**	A
101 to 108	Not Used			
109	2110404	2	Fitting, Straight Adapter	

FIGURE 6-1. HYDRAULIC DIAGRAM (CONTINUED)

ITEM #	PART NUMBER	QTY.	DESCRIPTION	REV.

SECTION 7
ELECTRICAL

FIGURE 7-1. ELECTRICAL SCHEMATIC

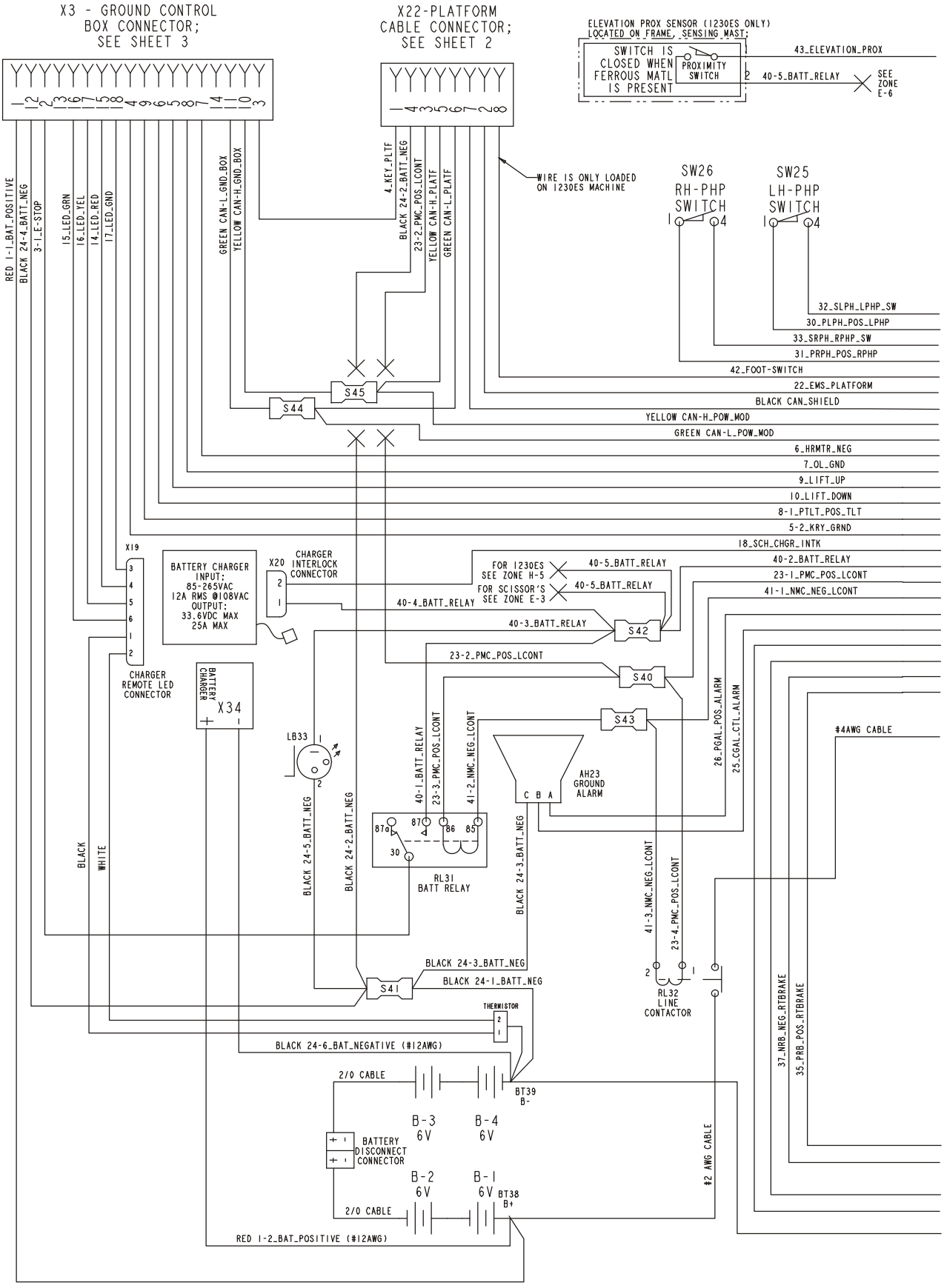

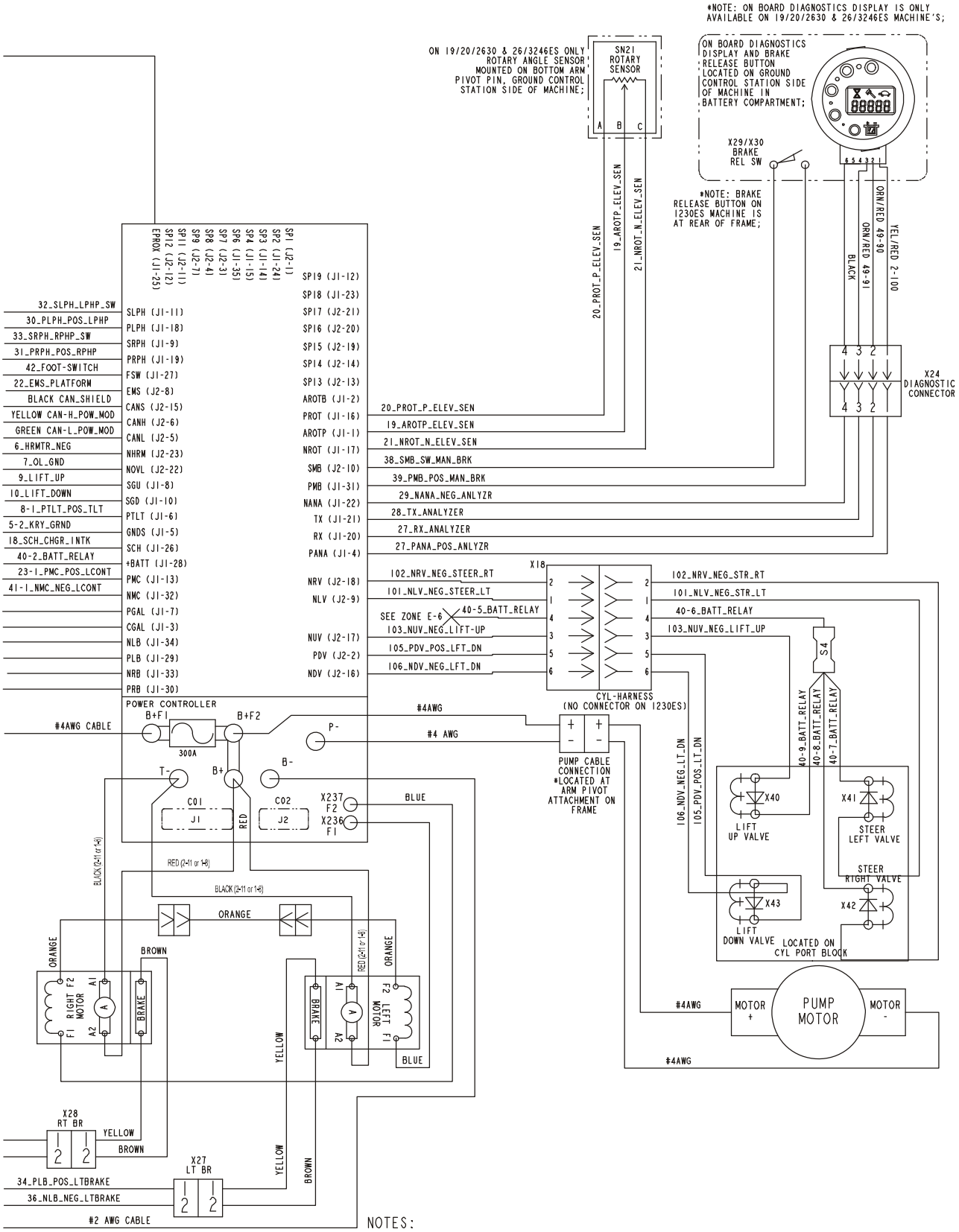

NOTES:
1. ALL WIRES ARE #18 AWG UNLESS OTHERWISE NOTED.
2. ALL WIRES ARE WHITE IN COLOR UNLESS OTHERWISE NOTED OR LARGER THAN #18 AWG.

1001114879 F

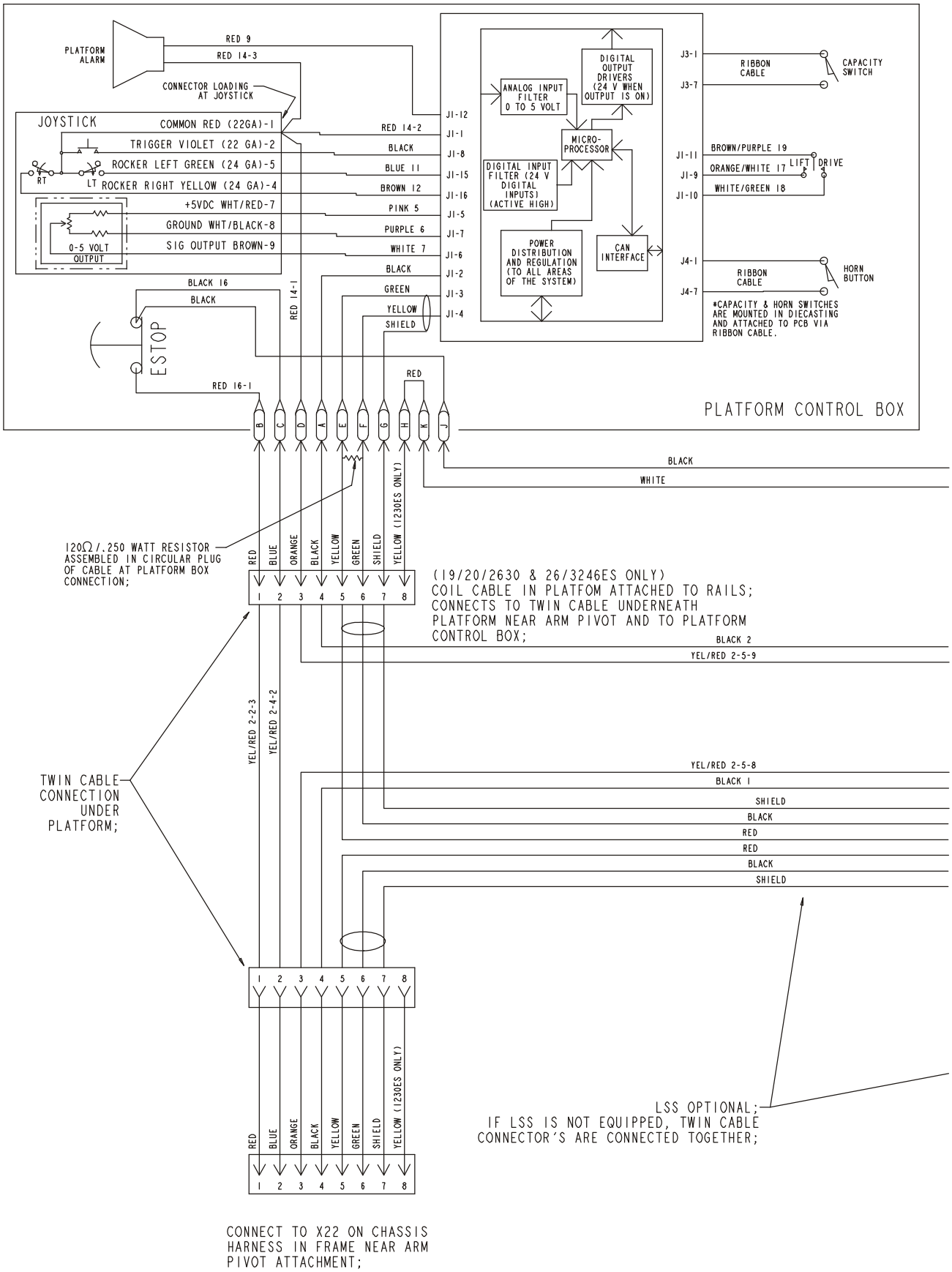
PLATFORM ALARM
RED 9
RED 14-3
CONNECTOR LOADING AT JOYSTICK
JOYSTICK
COMMON RED (22GA)-1
TRIGGER VIOLET (22 GA)-2
ROCKER LEFT GREEN (24 GA)-5
RT
LT
ROCKER RIGHT YELLOW (24 GA)-4
+5VDC WHT/RED-7
GROUND WHT/BLACK-8
SIG OUTPUT BROWN-9
0-5 VOLT OUTPUT
RED 14-2
BLACK
BLUE 11
BROWN 12
PINK 5
PURPLE 6
WHITE 7
BLACK
GREEN
YELLOW
SHIELD
J1-12
J1-1
J1-8
J1-15
J1-16
J1-5
J1-7
J1-6
J1-2
J1-3
J1-4
ANALOG INPUT FILTER 0 TO 5 VOLT
DIGITAL OUTPUT DRIVERS (24 V WHEN OUTPUT IS ON)
MICRO-PROCESSOR
DIGITAL INPUT FILTER (24 V DIGITAL INPUTS) (ACTIVE HIGH)
POWER DISTRIBUTION AND REGULATION (TO ALL AREAS OF THE SYSTEM)
CAN INTERFACE
J3-1
J3-7
RIBBON CABLE
CAPACITY SWITCH
J1-11
J1-9
J1-10
BROWN/PURPLE 19
ORANGE/WHITE 17
WHITE/GREEN 18
LIFT
DRIVE
J4-1
J4-7
RIBBON CABLE
HORN BUTTON
*CAPACITY & HORN SWITCHES ARE MOUNTED IN DIECASTING AND ATTACHED TO PCB VIA RIBBON CABLE.
BLACK 16
BLACK
RED 14-1
ESTOP
RED 16-1
RED
PLATFORM CONTROL BOX
B C D A E F G H K J
BLACK
WHITE
120Ω/.250 WATT RESISTOR ASSEMBLED IN CIRCULAR PLUG OF CABLE AT PLATFORM BOX CONNECTION;
RED BLUE ORANGE BLACK YELLOW GREEN SHIELD YELLOW (1230ES ONLY)
1 2 3 4 5 6 7 8
(19/20/2630 & 26/3246ES ONLY)
COIL CABLE IN PLATFOM ATTACHED TO RAILS;
CONNECTS TO TWIN CABLE UNDERNEATH
PLATFORM NEAR ARM PIVOT AND TO PLATFORM
CONTROL BOX;
BLACK 2
YEL/RED 2-5-9
TWIN CABLE CONNECTION UNDER PLATFORM;
YEL/RED 2-2-3
YEL/RED 2-4-2
YEL/RED 2-5-8
BLACK 1
SHIELD
BLACK
RED
RED
BLACK
SHIELD
LSS OPTIONAL;
IF LSS IS NOT EQUIPPED, TWIN CABLE CONNECTOR'S ARE CONNECTED TOGETHER;
CONNECT TO X22 ON CHASSIS HARNESS IN FRAME NEAR ARM PIVOT ATTACHMENT;

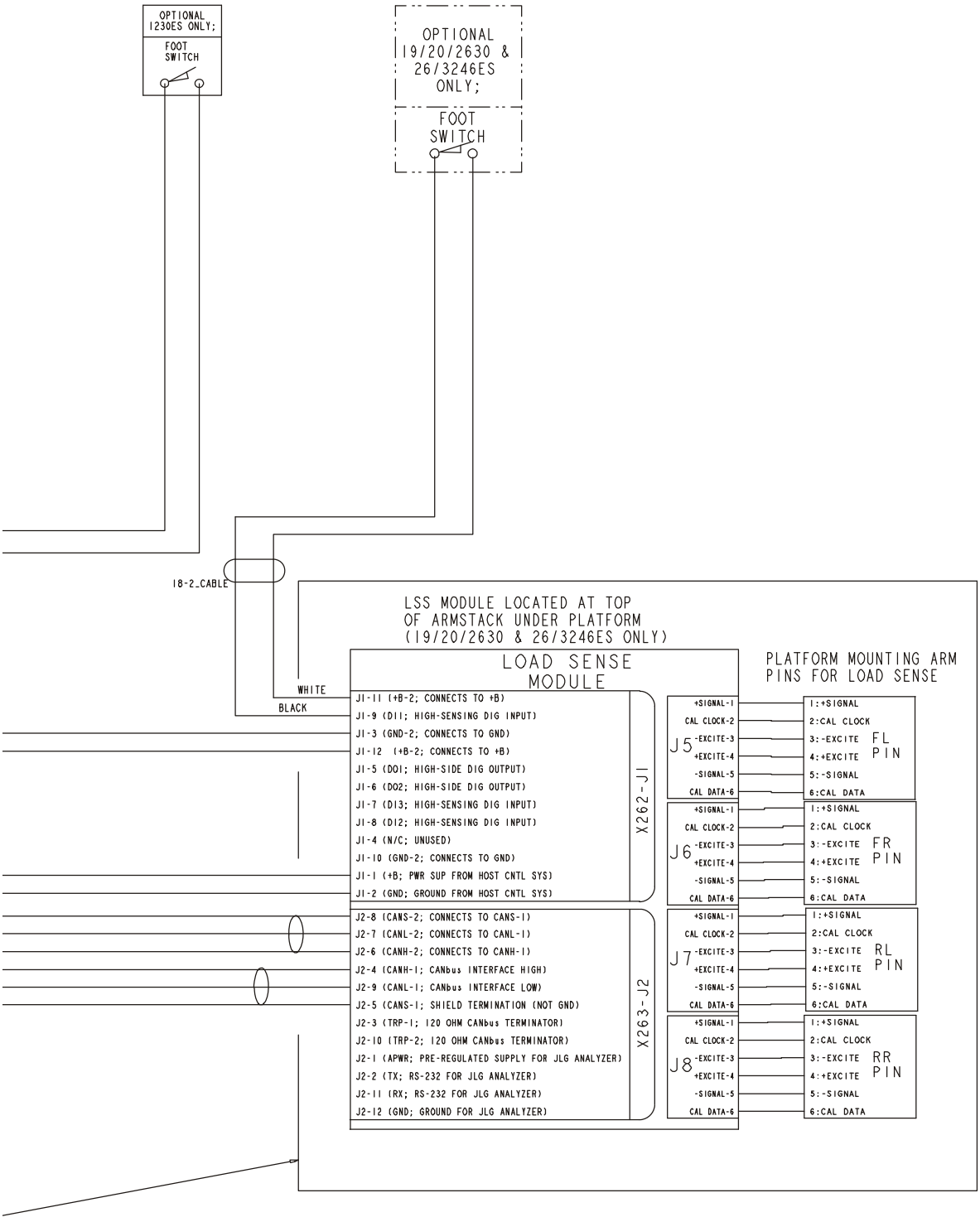

1001114879 F

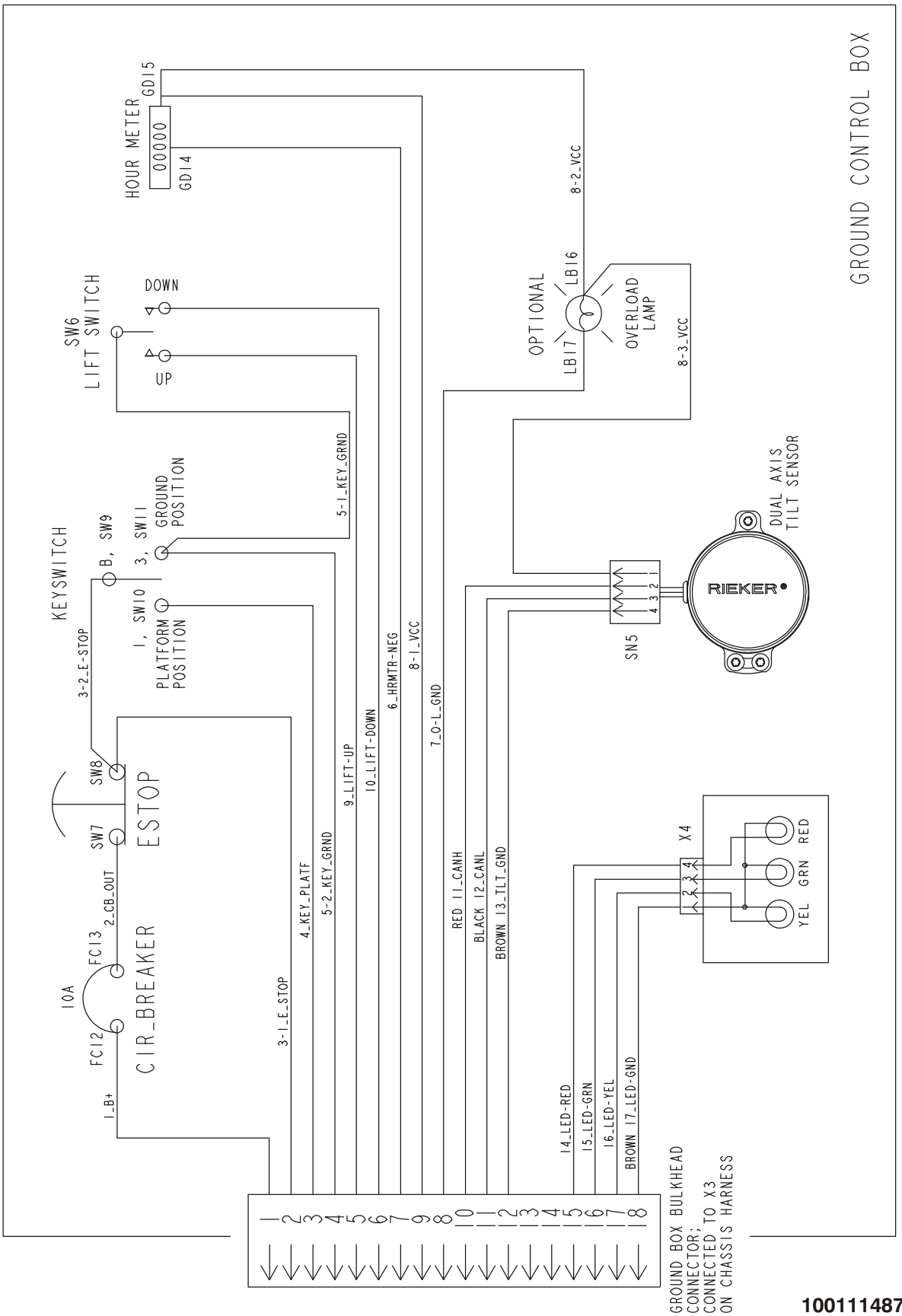

1001114879 F

THIS PAGE INTENTIONALLY LEFT BLANK

FIGURE 7-2. 1930ES ELECTRICAL COMPONENTS INSTALLATION

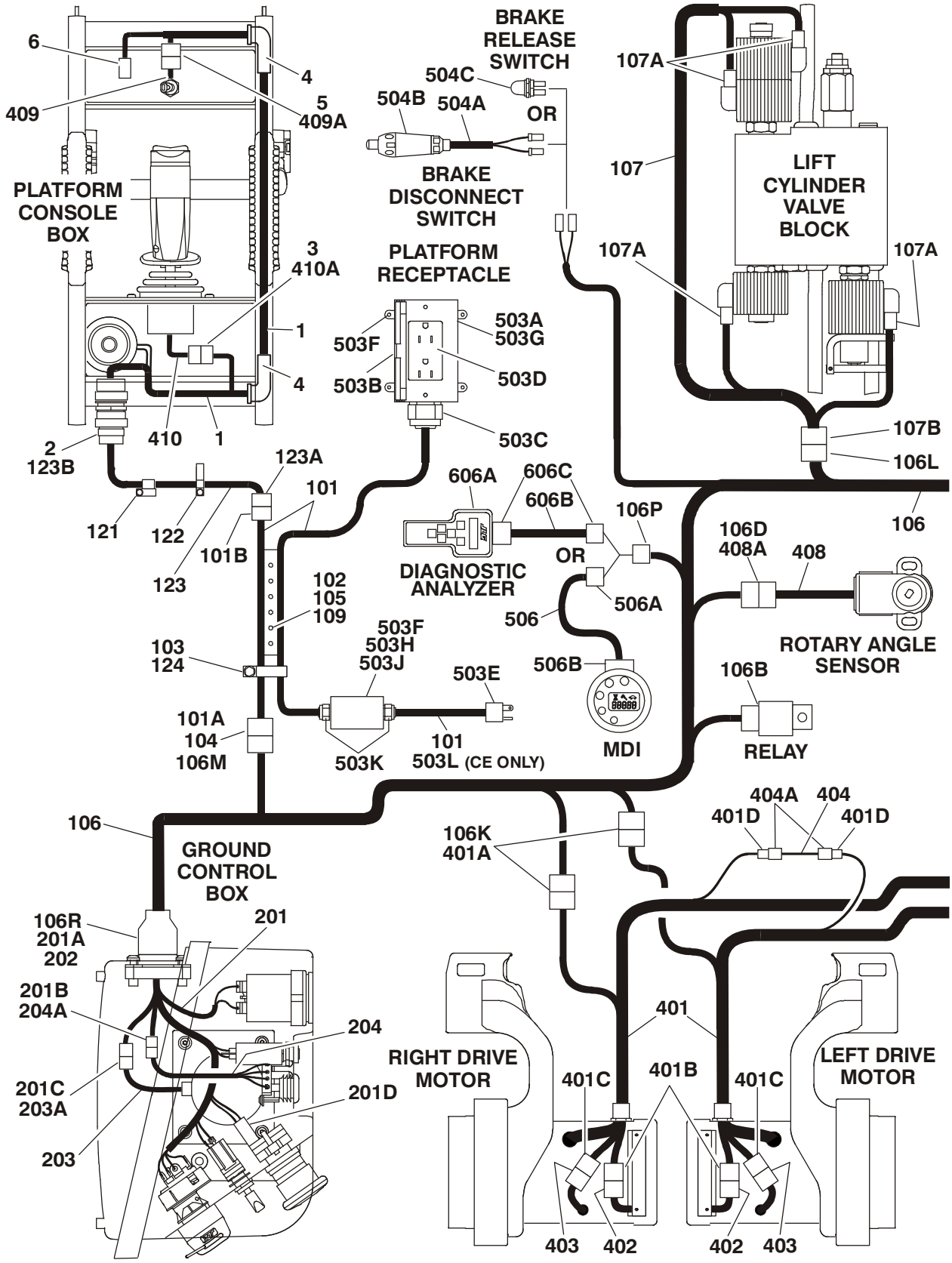

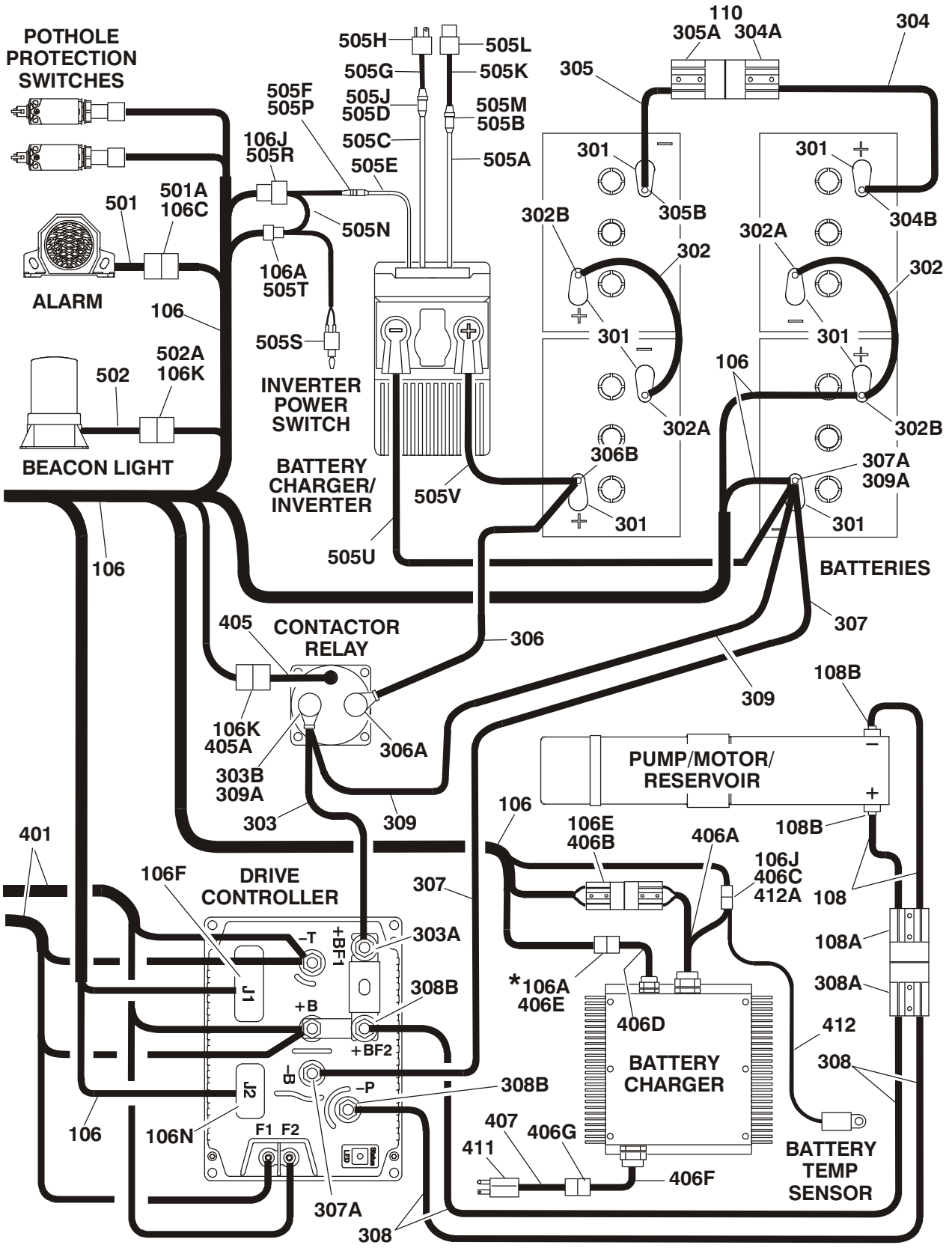

*NOTE: THIS CONNECTION USED ONLY WHEN FOOTSWITCH OR BATTERY CHARGER INTERLOCK OPTIONS ARE REQUIRED.

FIGURE 7-2. 1930ES ELECTRICAL COMPONENTS INSTALLATION

ITEM #	PART NUMBER	QTY.	DESCRIPTION	REV.
		Ref.	**CONSOLE BOX COMPONENTS**	
1	4922870	1	Platform Box Harness	B
2	4461016	1	Connector - 14 Position	
	4460464	5	Pin, Male	
	4460466	9	Plug, Sealing	
	4460496	1	Lockwasher	
	4460497	1	Nut, Panel	
3	4460265	1	Plug, Male - 9 Position	
	4460267	8	Pin, Male	
4	2540042	2	Grommet 90°	
5	Not Available	1	Receptacle, Female - 3 Position	
6	4461057	1	Plug, Male - 16 Position	
		Ref.	**PLATFORM CABLES INSTALLATION**	
	1001116630	Ref.	**ANSI, ANSI Export, Japanese & UL Specs**	A
	1001116631	Ref.	**Australian & CE Specs**	A
101		1	Platform to Ground Harness Options:	
	1001094154		ANSI, ANSI Export, Japanese & UL Specs:	D
	1001094332		Australian & CE Specs:	C
101A	4460930	1	Plug, Male - 8 Position	
	4460465	4	Socket, Female	
	4460944	3	Socket, Female (Gold)	
	4460466	1	Plug, Sealing	
	0840061	1	Boot, 8 Position Plug	
	2820026	A/R	Insulation, Clear Tubing	
	2820028	A/R	Heat Shrink	
101B	4460930	1	Plug, Male - 8 Position	
	4460465	4	Socket, Female	
	4460944	3	Socket, Female (Gold)	
	4460466	1	Plug, Sealing	
	0840061	1	Boot, 8 Position Plug	
	2820026	A/R	Insulation, Clear Tubing	
	2820028	A/R	Heat Shrink	
102	1380158	A/R	Retainer	
103	1320318	A/R	P-Clamp 3/4”	
104	0100048	A/R	Grease, Dielectric	
105	4740545	A/R	Washer, Special Cable	
106	1001116634	1	Chassis Harness	E
	1001115126		Wiring Diagram - Chassis	A
106A	4460320	1	Plug, Male - 2 Position (Note: Connection to this plug used only when footswitch or battery interlock options are required)	
	4460226	2	Socket, Female	
106B	1001097347	1	Relay	
	4460374	1	Plug, Relay	
	4460375	3	Terminal	
106C	4460539	1	Plug, Male - 3 Position	

FIGURE 7-2. 1930ES ELECTRICAL COMPONENTS INSTALLATION

ITEM #	PART NUMBER	QTY.	DESCRIPTION	REV.
	4460465	2	Socket, Female	
106D	4460539	1	Plug, Male - 3 Position	
	4460465	3	Socket, Female	
106E	4460648	1	Connector, Anderson	
106F	4460873	1	Plug, Male - 35 Position	
	4460871	26	Socket, Female	
106G	Not Used			
106H	Not Used			
106J	4460894	1	Plug, Male - 6 Position	
	4460465	4	Socket, Female	
106K	4460897	4	Receptacle, Female - 2 Position	
	4460464	8	Pin, Male	
106L	4460899	1	Connector, Female - 6 Position	
	4460464	6	Pin, Male	
106M	4460931	1	Receptacle, Female - 8 Position	
	4460464	4	Pin, Male	
	4460943	3	Pin, Male (Gold)	
	0840058	1	Boot	
106N	1001096138	1	Plug, Male - 23 Position	
	4460871	13	Socket, Female	
106P	4460761	1	Receptacle, Female - 4 Position	
	4460227	4	Pin, Male	
106R	1001115076	1	Plug, Male - 18 Position	
	4460465	14	Socket, Female	
	4460942	2	Socket, Female	
107	1001115002	1	Lift Cylinder Harness	B
107A	4460891	4	Plug, Male - 2 Position	
	4460465	8	Socket, Female	
107B	4460894	1	Plug, Male - 6 Position	
	4460465	6	Socket, Female	
	0840059	1	Boot	
108	4923647	1	Power to Pump Motor Harness	B
108A		1	Connector, Anderson Options:	
	Not Available		Red	
	Not Available		Gray	
108B	0840041	2	Boot, Terminal (Red)	
109		A/R	Screw M6 Options:	
	0760610		20mm Length	
	0760614		30mm Length	
	0760615		35mm Length	
110		1	Bracket, Battery Connector Options:	
	0903339		Non-UL Machines	
	1001110826		UL Machines	
	0760615	1	Screw M6 x 35mm	
	3290605	1	Locknut M6	
	4811702	2	Flatwasher M6	
111	1001116635	Ref.	Battery Cable Kit (See Item 301- 309 for Breakdown)	
112 to 120	Not Used			

FIGURE 7-2. 1930ES ELECTRICAL COMPONENTS INSTALLATION

ITEM #	PART NUMBER	QTY.	DESCRIPTION	REV.
121	1001094175	A/R	Clamp, Post	
	4010616	A/R	Screw M6 x 40mm	
	3290606	A/R	Nut, Acorn M6	
122	1001094180	4	Clamp, Rail	
	0760606	4	Screw M6 x 12mm	
	3290606	4	Nut, Acorn M6	
123	1001096705	1	Platform to Control Box Coiled Cable Harness	D
123A	4460931	1	Receptacle, Female - 8 Position	
	4460464	4	Pin, Male	
	4460943	3	Pin, Male (Gold)	
	4460466	1	Plug, Sealing	
	0840058	1	Boot, 8 Position Receptacle	
	2820026	A/R	Insulation, Clear Tubing	
	2820028	A/R	Heat Shrink	
123B	4460754	1	Connector -14 Position	
	4460465	4	Socket, Female	
	4460944	3	Socket, Female	
	4460466	4	Plug, Sealing	
	3730119	1	Resistor	
	4460493	1	Cap, Dust	
	2820026	A/R	Insulation, Clear Tubing	
124	1321716	2	P-Clamp, Double 1”	
	3900351	A/R	Capscrew M10 x 30mm	
	4812000	A/R	Flatwasher M10	
	3291005	A/R	Locknut M10	
		Ref.	**GROUND CONTROL BOX COMPONENTS**	
201	1001114935	1	Control Box Harness	A
201A	Not Available	1	Receptacle, Female - 18 Position	
	Not Available	16	Socket, Female	
201B	4460961	1	Receptacle, Female - 4 Position	
	4460267	4	Pin, Male	
201C	4461077	1	Plug, Male - 4 Position	
	4460928	4	Socket, Female	
201D	Use 4460418	1	Receptacle, Female - 3 Position	
	Use 4460419	3	Terminal	
202	1001114937	1	Mount, Harness Bulkhead	
203	Use 1001114933	1	Harness, Tilt Sensor (Includes Sensor)	A
203A	4461076	1	Receptacle, Female - 4 Position	
	4460929	4	Pin, Male	
204	Use 0610161	1	Harness, Charger LED (Includes PC Board	
204A	4460321	1	Plug, Male - 4 Position	
	4460268	3	Socket, Female	

FIGURE 7-2. 1930ES ELECTRICAL COMPONENTS INSTALLATION

ITEM #	PART NUMBER	QTY.	DESCRIPTION	REV.
	1001116635	Ref.	**BATTERY CABLE KIT**	E
	0275480	Ref.	**BATTERY CABLE COMPONENTS (UL SPEC ONLY)**	E
301	0840060	8	Boot, Terminal (Gray) (Covers only the Battery Terminal Base)	
302	1060998	2	Cable, Battery (Battery Positive to Battery Negative)	E
302A	Not Available	2	Boot, Terminal (Black) (1 Per Cable Assembly)	
302B	Not Available	2	Boot, Terminal (Red) (1 Per Cable Assembly)	
303	1001114992	1	Cable, Battery (Contactor to Drive Module B+)	A
303A	Not Available	1	Boot, Terminal (Black)	
303B	Not Available	1	Boot, Terminal (Red)	
304		1	Cable, Battery (LH Battery to Disconnect)	
	4923365		Single Pole	C
	Use 1001127523		Two Pole (was p/n 4923413)	B/E
304A		1	Connector, Anderson Options:	
	Not Available	1	Single Pole (Purchase p/n 4923365)	
	Not Available	1	Two Pole (Purchase p/n 4923414)	
304B	Not Available	1	Boot, Terminal (Red)	
305		1	Cable, Battery (RH Batteries to Disconnect) Options:	
	4923366		Single Pole	B
	4923414		Two Pole	D
305A		1	Connector, Anderson Options:	
	Not Available	1	Single Pole (Purchase p/n 4923366)	
	Not Available	1	Two Pole (Purchase p/n 4923413 & 1001127523)	
305B		1	Boot, Terminal Options:	
	Not Available		Black	
	Not Available		Red	
306	4923367	1	Cable, Battery (RH Battery to Contactor)	B
306A	Not Available	1	Boot, Terminal (Black)	
306B	Not Available	1	Boot, Terminal (Red)	
307 & 307A	Not Required			
308	4923648	2	Cable, Battery (Power to Pump Motor)	B
308A		1	Connector, Anderson Options:	
	Not Available		Red	
	Not Available		Gray	
308B	0840041	1	Boot, Terminal (Red)	
309	4923374	1	Cable, Battery (LH Battery to Contactor)	B
309A	Not Available	2	Boot, Terminal (Red)	
		Ref.	**STANDARD HARNESSES**	
401	1001091502	2	Drive Motor/Brake Harness	E
401A	4460891	2	Plug, Male - 2 Position (1 Per Harness)	
	4460465	4	Socket, Female (2 Per Harness)	
401B	70001442	2	Plug, Male - 2 Position (1 Per Harness) (To Brake)	
	Not Available	4	Socket, Female (2 Per Harness) (To Brake)	
401C	70001443	2	Plug, Male - 2 Position (1 Per Harness) (To Motor)	
	70001444	4	Socket, Female (2 Per Harness) (To Motor)	

FIGURE 7-2. 1930ES ELECTRICAL COMPONENTS INSTALLATION

ITEM #	PART NUMBER	QTY.	DESCRIPTION	REV.
401D		A/R	Connector Options:	
	4461261	1	Plug, Male - 1 Position	
	4460509	1	Terminal	
402	Not Available	2	Harness, Brake (Internal Connections - Purchase Complete Brake)	
	Not Available	2	Receptacle, Female - 2 Position (1 Per Harness)	
	Not Available	4	Pin, Male (2 Per Harness)	
403	Not Available	2	Harness, Motor (Internal Connections - Purchase Complete Motor)	
	Not Available	2	Receptacle, Female - 2 Position (1 Per Harness)	
	Not Available	4	Pin, Male (2 Per Harness)	
404	4923602	2	Harness, Field Wire Connection	B
404A	4461260	2	Receptacle, Female - 1 Position	
	4460508	2	Terminal	
405	3740150	1	Contactor Relay Harness (Includes Relay)	
405A	4460891	1	Plug, Male - 2 Position	
	4460465	2	Socket, Female	
406		Ref.	Battery Charger Components	
406A	Not Available		DC Harness/Cord Set	
406B	4460648	1	Plug, Anderson	
406C	4460899	1	Connector, Female - 6 Position	
	4460464	6	Pin, Male	
406D	Not Available	1	Harness with Connector (Note: Connection to this plug used only when battery interlock options are required)	
406E	4460424	1	Connector, Female - 2 Position (Note: Connection to this plug used only when battery interlock options are required)	
	4460227	2	Pin, Male	
406F	Not Available	1	AC Harness/Cord Set	
406G	Not Available	1	Connector, Female	
407		1	Cable, AC Power to Charger Options:	
	1001103257		Cable with Factory Supplied Plug (Orange)	
	1001103258		Cable with Locally Supplied Plug (Orange)	
408	1001092354	1	Rotary Angle Sensor and Harness (Separate Harness Not Available) (was p/n 4360526)	
408A	4460536	1	Receptacle, Female - 3 Position	
	4460464	3	Pin, Male	
409	4360539	1	Toggle Switch and Harness (No Separate Harness Available)	
409A	Not Available	1	Plug, Male - 3 Position	
410	Not Available	1	Joystick Harness	
410A	4460266	1	Receptacle, Female - 9 Position	
	4460226	8	Socket, Female	
411		1	Plug Options:	
	Not Available		ANSI Spec Plug (Use p/n 1001103257)	
	Not Available		Australian & Japanese Specs (Purchase Locally)	
			CE Spec Options:	
	0275666	Ref.	IEC Yellow Receptacle Installation	A
	4461196		Receptacle, IEC Yellow	
	0276667	Ref.	IEC Blue Receptacle Installation	A
	4661199		Receptacle, IEC Blue	

FIGURE 7-2. 1930ES ELECTRICAL COMPONENTS INSTALLATION

ITEM #	PART NUMBER	QTY.	DESCRIPTION	REV.
411 cont'd	0275665	Ref.	AFSINT 107 Keyed Ground Receptacle Installation	A
	4661249		Receptacle, AFSINT 107 Keyed Ground	
	0275663	Ref.	CEE 7 Post Ground Receptacle Installation	A
	4661202		Receptacle, CEE 7 Post Ground	
	0275664	Ref.	CEE 7 Side Ground Receptacle Installation	A
	4661205		Receptacle, CEE 7 Side Ground	
412	Use 1001127269	1	Battery Temperature Sensor Harness (Includes Sensor and Instructions) (was p/n 1001112113)	
412A	4460465	2	Socket, Female	
		Ref.	**OPTIONAL HARNESSES**	
501	0140043	1	Alarm and Harness (Separate Harness Not Available)	
501A	4460536	1	Receptacle, Female - 3 Position	
	4460464	3	Pin, Male	
502	2920161	1	Beacon Light and Harness (Separate Harness Not Available)	
502A	4460891	1	Plug, Male - 2 Position (1 Per Harness)	
	4460465	2	Socket, Female (2 Per Harness)	
503		Ref.	Platform Electrical Outlet Components	
		Ref.	ANSI, ANSI Export, CSA, Japanese & UL Specs Options:	
	0272839	Ref.	110V with Receptacle & Plug	H
	0272843	Ref.	220V without Receptacle & Plug (Locally Supplied Components)	F
		Ref.	Australian Specs Options:	
	0272843	Ref.	220V without Receptacle & Plug (Locally Supplied Components)	F
		Ref.	CE Specs Options:	
	0275487	Ref.	110V with IEC Yellow Receptacle & Plug & Circuit Breaker	C
	0272843	Ref.	220V without Receptacle & Plug (Locally Supplied Components)	F
	Use 0275488	Ref.	220V with IEC Blue Receptacle & Plug & Circuit Breaker (was p/n 02754887)	C
	0275486	Ref.	220V with AFSINT 107 Keyed Ground Receptacle & Plug & Circuit Breaker	C
	0275472	Ref.	220V with CEE 7 Post Ground Receptacle & Plug & Circuit Breaker (2x4 Box)	C
	0275489	Ref.	220V with CEE 7 Post Ground Receptacle & Plug & Circuit Breaker (70x70 Box)	D
	0275485	Ref.	220V with CEE 7 Side Ground Receptacle & Plug & Circuit Breaker (2x4 Single Box)	C
	1001096628	Ref.	220V with CEE 7 Side Ground Receptacle & Plug & Circuit Breaker (2x4 Dual Boxes) **Note: Qty shown is for single Receptacle Box. Double Qty listed for Dual Receptacle Boxes.**	A
	0275490	Ref.	220V with CEE 7 Side Ground Receptacle & Plug & Circuit Breaker (70x70 Box)	D
		1	Decal - AC Power (Not Shown)	
	1703464		110V	
	3252507		220V	

FIGURE 7-2. 1930ES ELECTRICAL COMPONENTS INSTALLATION

ITEM #	PART NUMBER	QTY.	DESCRIPTION	REV.
503A		A/R	Box, Switch Options:	
	0861731	1	0272839, 0275472, 0275485, 0275486 & 1001096628 Installations	
	Not Available	0	0272843 Installation (Purchase Locally)	
	4460315	1	0272839 Installation (Terminal, Spade) (Not Shown)	
	0861781	1	0275487 & 0275488 Installations	
	See Note	1	0275774/0275775 Installations **(Note: Was p/n0861782 which is no longer available. Use p/n 1001100344 CEE 7 Side Ground Service Kit or p/n 1001100343 CEE 7 Post Ground Service Kit. Kits includes Box p/n 1001141967 & items 503B, 503D & 503E.)**	
	1001141967	1	1001100343, 1001100344, 1001141970 & 1001141971 Service Kits	
503B		A/R	Cover Options:	
	1671207	1	0272839 Installation	
	Not Available	0	0272843 Installation (Purchase Locally)	
	4461244	1	0275472 Installation (Includes Receptacle)	
	4461245	1	0275485 & 1001096628 Installations (Includes Receptacle)	
	4461246	1	0275486 Installation (Includes Receptacle)	
	4461198	1	0275487 Installation (Includes Receptacle)	
	4461201	1	0275488 Installation (Includes Receptacle)	
	Use 1001100343	1	0275489 Installation (Includes Receptacle) (was p/n 4461204 & 1001141971)	
	Use 1001100344	1	0275490 Installation (Includes Receptacle) (was p/n 4461207 & 1001141970)	
	1001141968	1	1001100343 & 1001141971 Service Kits	
	1001141969	1	1001100344 & 1001141970 Service Kits	
503C		A/R	Connector, Strain Relief Options:	
	4460662	1	0272839, 0275472, 0275485, 0275486 & 1001096628 Installations	
	Not Available	0	0272843 Installation (Purchase Locally)	
	4461257	1	0275487, 0275488, 0275489 & 0275490 Installations (90°)	
	4461258	1	0275487, 0275488, 0275489 & 0275490 Installations (Adapter)	
	4460633	1	0275520 & 0275521 Installations	
	4460428	1	0275522 & 0275523 Installations	
503D		A/R	Receptacle, Electrical Options:	
	4460346	1	0272839 Installation	
	Not Available	0	0272843 Installation (Purchase Locally)	
	4461244	1	0275472 Installation (Includes Cover)	
	4461245	1	0275485 & 1001096628 Installations (Includes Receptacle)	
	4461246	1	0275486 Installation (Includes Cover)	
	4461198	1	0275487 Installation (Includes Cover)	
	4461201	1	0275488 Installation (Includes Cover)	
	Use 1001100343	1	0275489 Installation (Includes Receptacle) (was p/n 4461204 & 1001141971)	
	Use 1001100344	1	0275490 Installation (Includes Receptacle) (was p/n 4461207 & 1001141970)	

FIGURE 7-2. 1930ES ELECTRICAL COMPONENTS INSTALLATION

ITEM #	PART NUMBER	QTY.	DESCRIPTION	REV.
503D cont'd	1001141968	1	1001100343 & 1001141971 Service Kits	
	1001141969	1	1001100344 & 1001141970 Service Kits	
503E		A/R	Plug End Options:	
	4460138	1	0272839 Installation (Male)	
	Not Available	0	0272843 Installation (Purchase Locally)	
	4461202	1	0275472/0275489 Installations & 1001100343/ 1001141971 Service Kits (Male)	
	4461203	1	0275472/0275489 Installations & 1001100343/ 1001141971 Service Kits (Female)	
	4461205	1	0275485/1001096628 Installations & 1001100344/ 1001141970 Service Kits (Male)	
	4461206	1	0275485/1001096628 Installations & 1001100344/ 1001141970 Service Kits (Female)	
	4461249	1	0275486 Installation (Male)	
	4461250	1	0275486 Installation (Female)	
	4461196	1	0275487 Installation (Male)	
	4461197	1	0275487 Installation (Female)	
	4461199	1	0275488 Installation (Male)	
	4461200	1	0275488 Installation (Female)	
	4461202	1	0275489 Installation (Male)	
	4461203	1	0275489 Installation (Female)	
	4461205	1	0275490 Installation (Male)	
	4461206	1	0275490 Installation (Female)	
503F		A/R	Hardware Options:	
	4010405		Screw M4 x 10mm	
	4010408		Screw M4 x 16mm	
	4010612		Screw M6 x 16mm	
	4191706		Screw M6 x 12mm	
	4191708		Screw M6 x 20mm	
	0760619		Screw M6 x 55mm	
	3290405		Locknut M4	
	3290605		Locknut M6	
	3290607		Locknut M6	
	4811400		Flatwasher M4	
	1001091102		Flatwasher M4 Oversize	
	4811700		Flatwasher M6	
503G		A/R	Bracket, Receptacle Box Mounting Options:	
	Not Required	0	0272839, 0272843, 0275472, 0275485, 0275486 & 1001096628 Installations	
	0903569	1	0275487, 0275488, 0275489 & 0275490 Installations	
	0903484	1	1001096628 Installation (2nd Receptacle Box Only)	
503H	0903566	1	Bracket, Circuit Breaker Mounting (Required Only on CE Spec Installations Except 0272843 Installation)	
	01001096627	1	Bracket, Circuit Breaker Mounting (Required Only on CE Spec 1001096628 Installation)	
503J	Use 2902541	A/R	Circuit Breaker Box Assembly (Required Only on CE Spec Installations Except 0272843 Installation):	E
		1	Circuit Breaker Options:	
	1001109475		Circuit Breaker - 16A	
	1001109482		Circuit Breaker - 30mA	
	4460957	1	Terminal Block	

FIGURE 7-2. 1930ES ELECTRICAL COMPONENTS INSTALLATION

ITEM #	PART NUMBER	QTY.	DESCRIPTION	REV.
	4460956	1	Barrier, Terminal Block	
503K	1001097150	1	Connector, Strain Relief (Required Only on CE Spec Installations Except 0272843 Installation)	
503L	1060908	55in/1.4m	Cable, Extension (Required Only on CE Spec Installations Except 0272843 Installation)	
503M	1060908	55in/1.4m	Cable, Electrical (Required Only on CE Spec 1001096628 Installation) (Not Shown - Connects 2 Receptacle Boxes)	
			— — — — — — — — — —	
	2902431	1	Receptacle Box Kit (110V GFI) (Includes Item 503A-503D) (0272839 Installation)	C
	0275216	1	Receptacle, Box & Plug Kit (110V IEC Yellow) (Includes Items 503A, 503B, 503C & Male 503E Plug End) (0275487 Installation)	1/A
	0275217	1	Receptacle, Box & Plug Kit (220V IEC Blue) (Includes Items 503A, 503B, 503D & Male 503E Plug End) (0275488 Installation)	1/A
	0275452	1	Receptacle Box Kit (220V CEE 7 Post Ground with 2x4 Box) (Includes Items 503A, 503B, 503D & Male 503E Plug End) (0275472 Installation)	1/A
	Use 1001100343	1	Receptacle, Box & Plug Kit (220V CEE 7 Post Ground with 70x70 Box) (Includes Items 503A, 503B, 503D & 503E) (0275489 Installation) (was p/n 0275218 & 1001141971)	B/A
	0275453	1	Receptacle Box Kit (220V CEE 7 Side Ground with 2x4 Box) (Includes Item 503A, 503B, 503D & Male 503E Plug End) (0275485 & 1001096628 Installations)	1/A
	Use 1001100344	1	Receptacle, Box & Plug Kit (220V CEE 7 Side Ground with 70x70 Box) (Includes Items 503A, 503B, 503D & 503E) (0275490 Installation) (was p/n 0275219 & 1001141970)	B/A
	0275454	1	Receptacle, Box & Plug Kit (220V AFSINT 107 Keyed Ground) (Includes Items 503A, 503B, 503D & Male 503E Plug End) (0275486 Installation)	1/A
504		1	Brake Disconnect /Release Switch Components	
504A	4922944	1	Brake Disconnect Harness & Switch	E
	1060680	15ft/2.7m	Cable, Electrical 18/2	
	4240003	1	Strap, Cinch (Not Shown)	
504B	4360613	1	Switch, Limit	
504C	4360387	1	Brake Release Switch	
505		Ref.	Battery Charger/Inverter Components (ANSI & CSA Option Only):	
505A	Not Available	1	AC Output Harness (Internal Part of Inverter)	
505B	Not Available	1	Receptacle, Female - 4 Position (Conxall T9014)	
505C	Not Available	1	AC Input Harness (Internal Part of Inverter)	
505D	Not Available	1	Receptacle, Female - 4 Position (Conxall T9016)	
505E	Not Available	1	Remote Control Harness (Internal Part of Inverter)	
505F	Not Available	1	Plug, Male - 8 Position (Conxall 7281-8PG-300)	
505G	4923389	1	AC Input Harness	C
505H	4460138	1	Plug, Male	
505J	Not Available	1	Plug, Male - 4 Position (Conxall T9017)	
505K	4923390	1	AC Output Harness	D
505L	4460779	1	Receptacle, Female	
505M	Not Available	1	Plug, Male - 4 Position (Conxall T9015)	
505N	4923391	1	Data Interface Harness	D
505P	Not Available	1	Plug, Male - 8 Position (Conxall 6280-8SG-318)	

FIGURE 7-2. 1930ES ELECTRICAL COMPONENTS INSTALLATION

ITEM #	PART NUMBER	QTY.	DESCRIPTION	REV.
505R	4460899	1	Receptacle, Female - 6 Position	
	4460464	4	Pin, Male	
	4460466	2	Plug, Seal	
	3990010	1	Diode 6A/600V	
505S	4360336	1	Switch, Toggle	
505T	4460424	2	Receptacle, Female - 2 Position	
	4460267	2	Pin, Male	
505U	4923392	1	Cable, Battery + to Inverter +	A
505V	4923393	1	Cable, Battery – to Inverter –	A
506	1001093556	1	MDI Harness	B
506A	4460321	1	Plug, Male	
	4460226	4	Socket, Female	
506B	4460868	1	Plug, Male - 6 Position	
	4460877	4	Terminal	
	1001094105	1	Boot	
		Ref.	**TOOLS FOR SERVICE**	
601	7002821	1	Crimper, Wire (Not Shown)	
602	7002823	1	Extractor, Pin - Universal (Not Shown)	
603	4460467	A/R	Extractor, Pin #16 Gauge (Not Shown)	
604	4460510	A/R	Extractor, Pin #12 Gauge (Not Shown)	
605	7002828	1	Stripper, Wire (Not Shown)	
606	2901443	1	Analyzer Kit (Not Shown)	
606A	1600244	1	Analyzer	
606B	1060633	1	Cable, Analyzer	
606C	4460321	2	Plug, Male - 4 Position	
	4460226	8	Socket, Female	
607	1001137005	1	Software Cables Kit (Not Shown)	

FIGURE 7-3. 2030ES/2630ES ELECTRICAL COMPONENTS INSTALLATION

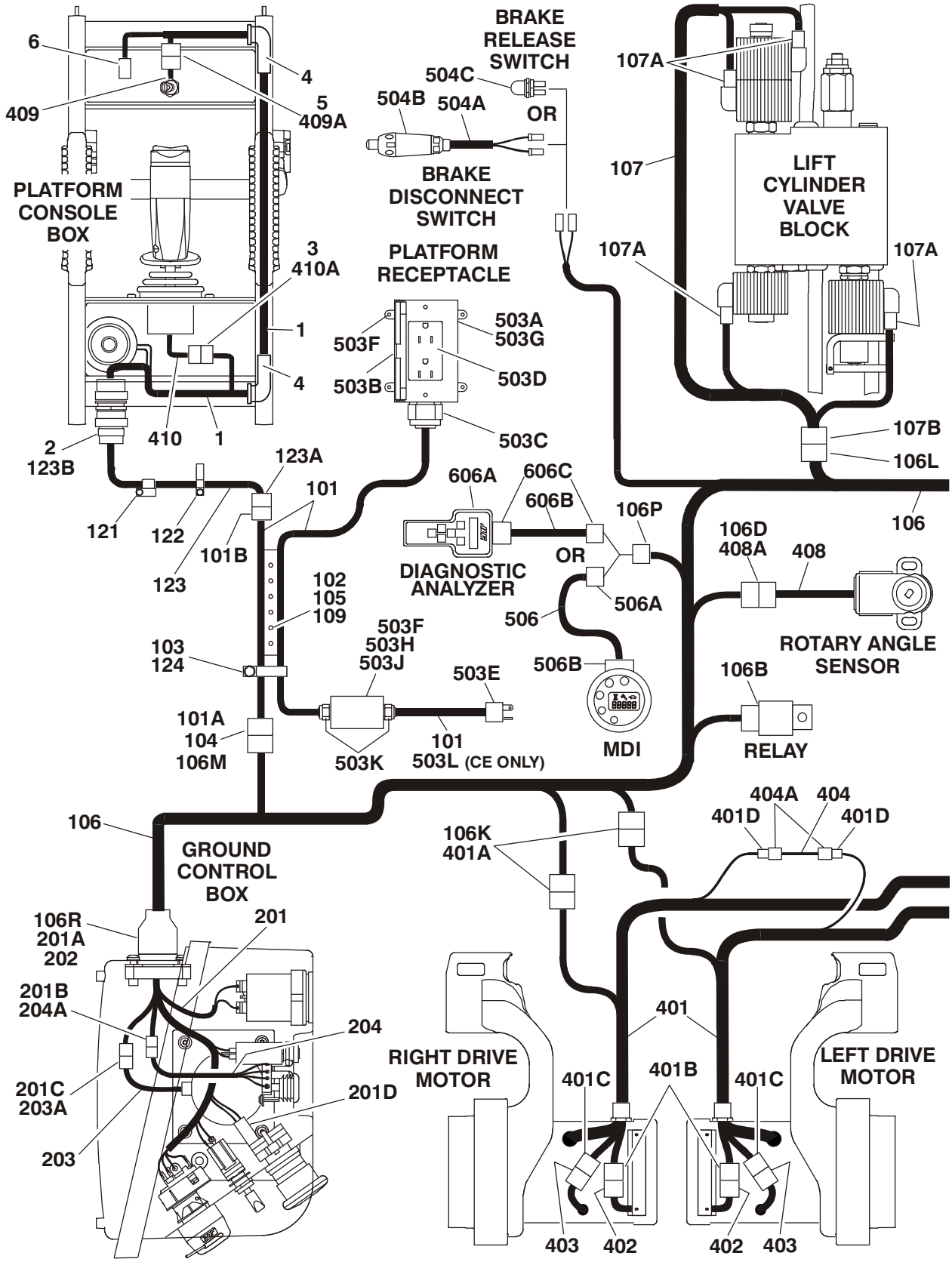

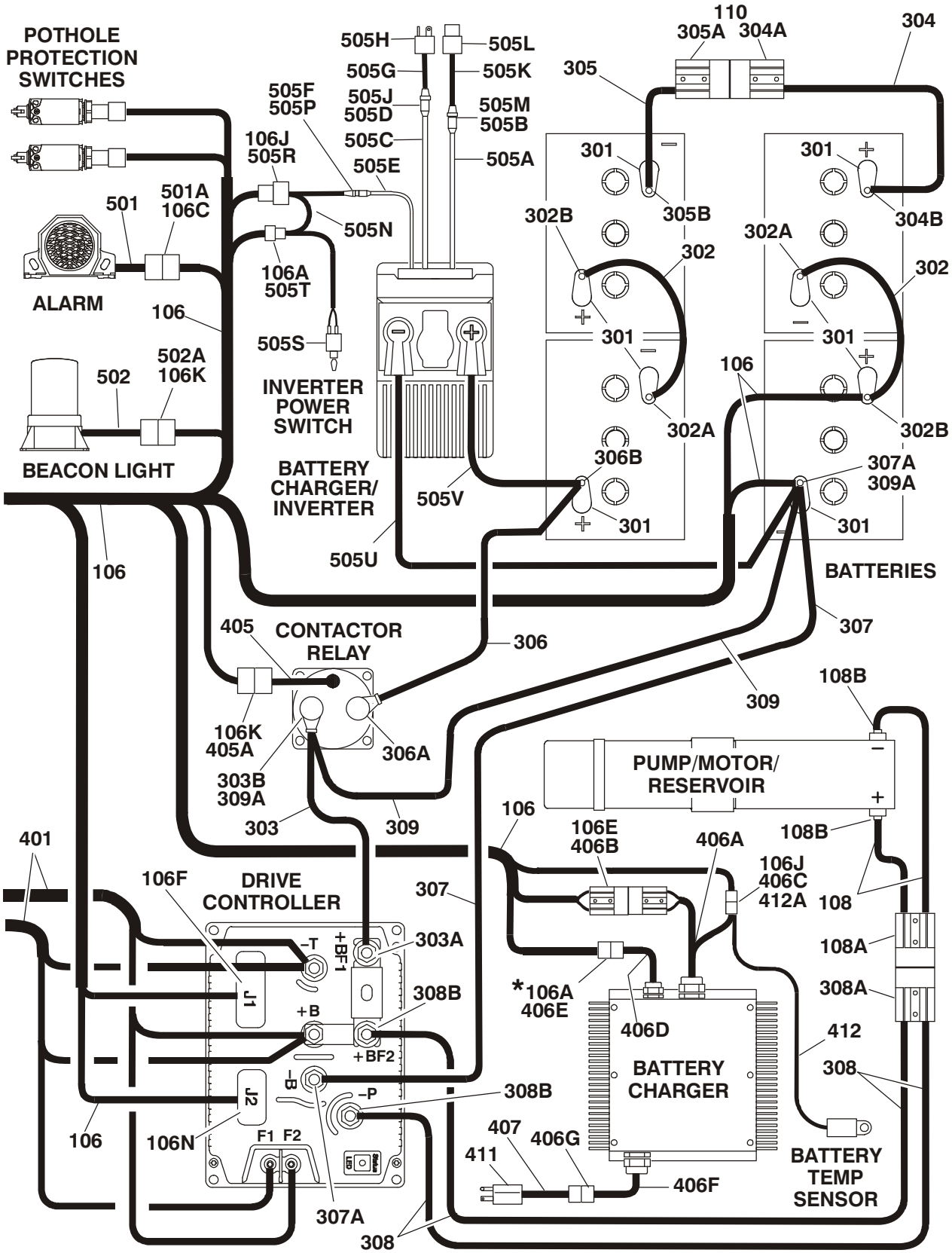

*NOTE: THIS CONNECTION USED ONLY WHEN FOOTSWITCH OR BATTERY CHARGER INTERLOCK OPTIONS ARE REQUIRED.

FIGURE 7-3. 2030ES/2630ES ELECTRICAL COMPONENTS INSTALLATION

ITEM #	PART NUMBER	QTY.	DESCRIPTION	REV.
		Ref.	**CONSOLE BOX COMPONENTS**	
1	4922870	1	Platform Box Harness	B
2	4461016	1	Connector - 14 Position	
	4460464	6	Pin, Male	
	4460466	8	Plug, Sealing	
	4460496	1	Lockwasher	
	4460497	1	Nut, Panel	
3	4460265	1	Plug, Male - 9 Position	
	4460267	8	Pin, Male	
4	2540042	2	Grommet 90°	
5	Not Available	1	Receptacle, Female - 3 Position	
6	4461057	1	Plug, Male - 16 Position	
		Ref.	**PLATFORM CABLES INSTALLATION**	
	1001114883	Ref.	**2030ES (ANSI, ANSI Export, Japanese & UL Specs)**	A
	1001114920	Ref.	**2030ES (Australian & CE Specs)**	A
	1001114884	Ref.	**2630ES (ANSI, ANSI Export, Japanese & UL Specs)**	A
	1001114921	Ref.	**2630ES (Australian & CE Specs)**	A
101		1	Platform to Ground Harness Options:	
	1001094155		2030ES ANSI, ANSI Export, Japanese & UL Specs	D
	1001094333		2030ES Australian & CE Specs	B
	1001094156		2630ES ANSI, ANSI Export, Japanese & UL Specs	D
	1001094334		2630ES Australian & CE Specs	B
101A	4460930	1	Plug, Male - 8 Position	
	4460465	4	Socket, Female	
	4460944	3	Socket, Female (Gold)	
	4460466	1	Plug, Sealing	
	0840061	1	Boot, 8 Position Plug	
	2820026	A/R	Insulation, Clear Tubing	
	2820028	A/R	Heat Shrink	
101B	4460930	1	Plug, Male - 8 Position	
	4460465	4	Socket, Female	
	4460944	3	Socket, Female (Gold)	
	4460466	1	Plug, Sealing	
	0840061	1	Boot, 8 Position Plug	
	2820026	A/R	Insulation, Clear Tubing	
	2820028	A/R	Heat Shrink	
102	1380158	A/R	Retainer	
103	Not Required			
104	0100048	A/R	Grease, Dielectric	
105	4740545	A/R	Washer, Special Cable	
106	1001114934	1	Chassis Harness	F
	1001115126		Wiring Diagram - Chassis	A
106A	4460320	1	Plug, Male - 2 Position (Note: Connection to this plug used only when footswitch or battery interlock options are required)	
	4460226	2	Socket, Female	

FIGURE 7-3. 2030ES/2630ES ELECTRICAL COMPONENTS INSTALLATION

ITEM #	PART NUMBER	QTY.	DESCRIPTION	REV.
106B	1001097347	1	Relay	
	4460374	1	Plug, Relay	
	4460375	3	Terminal	
106C	4460539	1	Plug, Male - 3 Position	
	4460465	2	Socket, Female	
106D	4460539	1	Plug, Male - 3 Position	
	4460465	3	Socket, Female	
106E	4460648	1	Connector, Anderson	
106F	4460873	1	Plug, Male - 35 Position	
	4460871	26	Socket, Female	
106G	Not Used			
106H	Not Used			
106J	4460894	1	Plug, Male - 6 Position	
	4460465	4	Socket, Female	
106K	4460897	4	Receptacle, Female - 2 Position	
	4460464	8	Pin, Male	
106L	4460899	1	Connector, Female - 6 Position	
	4460464	6	Pin, Male	
106M	4460931	1	Receptacle, Female - 8 Position	
	4460464	4	Pin, Male	
	4460943	3	Pin, Male (Gold)	
	0840058	1	Boot	
106N	1001096138	1	Plug, Male - 23 Position	
	4460871	13	Socket, Female	
106P	4460761	1	Receptacle, Female - 4 Position	
	4460227	4	Pin, Male	
106R	1001115076	1	Plug, Male - 18 Position	
	4460465	14	Socket, Female	
	4460942	2	Socket, Female	
107	1001115002	1	Lift Cylinder Harness	B
107A	4460891	4	Plug, Male - 2 Position	
	4460465	8	Socket, Female	
107B	4460894	1	Plug, Male - 6 Position	
	4460465	6	Socket, Female	
	0840059	1	Boot	
108	1001096794	1	Power to Pump Motor Harness	C
108A		1	Connector, Anderson Options:	
	Not Available		Red	
	Not Available		Gray	
108B	0840041	2	Boot, Terminal (Red)	
109		A/R	Screw M6 Options:	
	0760610		20mm Length	
	0760614		30mm Length	
110	4031713	1	Capscrew M6 x 45mm	
	3290605	1	Locknut M6	
111		1	Battery Cable Kit Options (See Item 301- 309 for Breakdown):	
	1001096799		USA Built Machines	
	1001115022		China Built Machines	
112 to 120	Not Used			

FIGURE 7-3. 2030ES/2630ES ELECTRICAL COMPONENTS INSTALLATION

ITEM #	PART NUMBER	QTY.	DESCRIPTION	REV.
121	1001094175	A/R	Clamp, Post	
	4010616	A/R	Screw M6 x 40mm	
	3290606	A/R	Nut, Acorn M6	
122	1001094180	4	Clamp, Rail	
	0760606	4	Screw M6 x 12mm	
	3290606	4	Nut, Acorn M6	
123	1001096706	1	Platform to Control Box Coiled Cable Harness	B
123A	4460931	1	Receptacle, Female - 8 Position	
	4460464	4	Pin, Male	
	4460943	3	Pin, Male (Gold)	
	4460466	1	Plug, Sealing	
	0840058	1	Boot, 8 Position Receptacle	
	2820026	A/R	Insulation, Clear Tubing	
	2820028	A/R	Heat Shrink	
123B	4460754	1	Connector -14 Position	
	4460465	4	Socket, Female	
	4460944	3	Socket, Female	
	4460466	4	Plug, Sealing	
	3730119	1	Resistor	
	4460493	1	Cap, Dust	
	2820026	A/R	Insulation, Clear Tubing	
124	1321716	2	P-Clamp, Double 1”	
	0760610	A/R	Capscrew M6 x 20mm	
	4751400	A/R	Flatwasher 1/4” Wide	
	3290605	A/R	Locknut M6	
		Ref.	**GROUND CONTROL BOX COMPONENTS**	
201	1001114935	1	Control Box Harness	A
201A	Not Available	1	Receptacle, Female - 18 Position	
	Not Available	16	Socket, Female	
201B	4460961	1	Receptacle, Female - 4 Position	
	4460267	4	Pin, Male	
201C	4461077	1	Plug, Male - 4 Position	
	4460928	4	Socket, Female	
201D	Use 4460418	1	Receptacle, Female - 3 Position	
	Use 4460419	3	Terminal	
202	1001114937	1	Mount, Harness Bulkhead	
203	Use 1001114933	1	Harness, Tilt Sensor (Includes Sensor)	A
203A	4461076	1	Receptacle, Female - 4 Position	
	4460929	4	Pin, Male	
204	Use 0610161	1	Harness, Charger LED (Includes PC Board	
204A	4460321	1	Plug, Male - 4 Position	
	4460268	3	Socket, Female	

FIGURE 7-3. 2030ES/2630ES ELECTRICAL COMPONENTS INSTALLATION

ITEM #	PART NUMBER	QTY.	DESCRIPTION	REV.
		Ref.	**BATTERY CABLE KITS**	
	1001096799	Ref.	**USA Built Machines**	C
	1001115022	Ref.	**China Built Machines**	K
301	0840060	8	Boot, Terminal (Gray) (Covers only the Battery Terminal Base)	
302	1060998	2	Cable, Battery (Battery Positive to Battery Negative)	E
302A	Not Available	2	Boot, Terminal (Black) (1 Per Cable Assembly)	
302B	Not Available	2	Boot, Terminal (Red) (1 Per Cable Assembly)	
303	1001114992	1	Cable, Battery (Contactor to Module B+)	A
303A	Not Available	1	Boot, Terminal (Black)	
303B	Not Available	1	Boot, Terminal (Red)	
304	Use 1001127523	1	Cable, Battery (LH Battery to Disconnect) (was p/n 4923413	B/E
304A	4460618	1	Connector, Anderson	
	Use 2560205	1	Handle, Connector	
304B	Not Available	1	Boot, Terminal (Red)	
305	4923414	1	Cable, Battery (RH Batteries to Disconnect)	D
305A	4460618	1	Connector, Anderson	
305B	Not Available	1	Boot, Terminal (Black)	
306	1001115471	1	Cable, Battery (RH Battery to Contactor)	A
306A	Not Available	1	Boot, Terminal (Black)	
306B	Not Available	1	Boot, Terminal (Red)	
307	1001115472	1	Cable, Battery (LH Battery to Connector B–)	A
307A	Not Available	1	Boot, Terminal (Black)	
308	1001096795	2	Cable, Battery (Power to Pump Motor)	C
308A		1	Connector, Anderson Options:	
	Not Available		Red	
	Not Available		Gray	
308B	0840041	1	Boot, Terminal (Red)	
309 & 309A	Not Required			
		Ref.	**STANDARD HARNESSES**	
401		2	Drive Motor/Brake Harness Options:	
	Use 1001134012		Cable USA Built Machines S/N0200198014 to S/N 0200207814 & China Built Machines S/N B200000100 to S/N B200000242 (was p/n 1001091843)	A/G
	1001132439		Cable USA Built Machines S/N 0200207814 to Present & China Built Machines S/N B200000242 to Present	A
401A	4460891	2	Plug, Male - 2 Position (1 Per Harness)	
	4460465	4	Socket, Female (2 Per Harness)	
401B	70001442	2	Plug, Male - 2 Position (1 Per Harness) (To Brake)	
	Not Available	4	Socket, Female (2 Per Harness) (To Brake)	
401C	70001443	2	Plug, Male - 2 Position (1 Per Harness) (To Motor)	
	70001444	4	Socket, Female (2 Per Harness) (To Motor)	
401D	4461261	1	Plug, Male - 1 Position	
	4460509	1	Terminal	
402	Not Available	2	Harness, Brake (Internal Connections - Purchase Complete Brake)	
	Not Available	2	Receptacle, Female - 2 Position (1 Per Harness)	
	Not Available	4	Pin, Male (2 Per Harness)	

FIGURE 7-3. 2030ES/2630ES ELECTRICAL COMPONENTS INSTALLATION

ITEM #	PART NUMBER	QTY.	DESCRIPTION	REV.
403	Not Available	2	Harness, Motor (Internal Connections - Purchase Complete Motor)	
	Not Available	2	Receptacle, Female - 2 Position (1 Per Harness)	
	Not Available	4	Pin, Male (2 Per Harness)	
404	4923602	2	Harness, Field Wire Connection	B
404A	4461260	2	Receptacle, Female - 1 Position	
	4460508	2	Terminal	
405	3740150	1	Contactor Relay Harness (Includes Relay)	
405A	4460891	1	Plug, Male - 2 Position	
	4460465	2	Socket, Female	
406		Ref.	Battery Charger Components	
406A	Not Available		DC Harness/Cord Set	
406B	4460648	1	Plug, Anderson	
406C	4460899	1	Connector, Female - 6 Position	
	4460464	6	Pin, Male	
406D	Not Available	1	Harness with Connector (Note: Connection to this plug used only when battery interlock options are required)	
406E	4460424	1	Connector, Female - 2 Position (Note: Connection to this plug used only when battery interlock options are required)	
	4460227	2	Pin, Male	
406F	Not Available	1	AC Harness/Cord Set	
406G	Not Available	1	Connector, Female	
407		1	Cable, AC Power to Charger Options:	
	1001103257		Cable with Factory Supplied Plug	
	1001103258		Cable with Locally Supplied Plug	
408	1001092354	1	Rotary Angle Sensor and Harness (Separate Harness Not Available) (was p/n 4360526)	
408A	4460536	1	Receptacle, Female - 3 Position	
	4460464	3	Pin, Male	
409	4360539	1	Toggle Switch and Harness (No Separate Harness Available)	
409A	Not Available	1	Plug, Male - 3 Position	
410	Not Available	1	Joystick Harness	
410A	4460266	1	Receptacle, Female - 9 Position	
	4460226	8	Socket, Female	
411		1	Plug Options:	
	Not Available		ANSI Spec Plug (Use p/n 1001103257)	
	Not Available		Australian & Japanese Specs (Purchase Locally)	
			CE Spec Options:	
	0275666	Ref.	IEC Yellow Receptacle Installation	A
	4461196		Receptacle, IEC Yellow	
	0276667	Ref.	IEC Blue Receptacle Installation	A
	4661199		Receptacle, IEC Blue	
	0275665	Ref.	AFSINT 107 Keyed Ground Receptacle Installation	A
	4661249		Receptacle, AFSINT 107 Keyed Ground	
	0275663	Ref.	CEE 7 Post Ground Receptacle Installation	A
	4661202		Receptacle, CEE 7 Post Ground	
	0275664	Ref.	CEE 7 Side Ground Receptacle Installation	A
	4661205		Receptacle, CEE 7 Side Ground	

FIGURE 7-3. 2030ES/2630ES ELECTRICAL COMPONENTS INSTALLATION

ITEM #	PART NUMBER	QTY.	DESCRIPTION	REV.
412	Use 1001127269	1	Battery Temperature Sensor Harness (Includes Sensor and Instructions) (was p/n 1001112113)	
412A	4460465	2	Socket, Female	
		Ref.	**OPTIONAL HARNESSES**	
501	0140043	1	Alarm and Harness (Separate Harness Not Available)	
501A	4460536	1	Receptacle, Female - 3 Position	
	4460464	3	Pin, Male	
502	2920161	1	Beacon Light and Harness (Separate Harness Not Available)	
502A	4460891	1	Plug, Male - 2 Position (1 Per Harness)	
	4460465	2	Socket, Female (2 Per Harness)	
503		Ref.	Platform Electrical Outlet Components	
		Ref.	ANSI, ANSI Export, CSA, Japanese & UL Specs Options:	
	0272839	Ref.	110V with Receptacle & Plug	H
	0272843	Ref.	220V without Receptacle & Plug (Locally Supplied Components)	F
		Ref.	Australian Specs Options:	
	0272843	Ref.	220V without Receptacle & Plug (Locally Supplied Components)	F
		Ref.	CE Specs Options:	
	Use 0275487	Ref.	110V with IEC Yellow Receptacle & Plug & Circuit Breaker (was p/n 0275513)	C
	0272843	Ref.	220V without Receptacle & Plug (Locally Supplied Components)	F
	Use 0275488	Ref.	220V with IEC Blue Receptacle & Plug & Circuit Breaker (was p/n 0275514)	C
	Use 0275486	Ref.	220V with AFSINT 107 Keyed Ground Receptacle & Plug & Circuit Breaker (was p/n 0275512)	C
	Use 0275472	Ref.	220V with CEE 7 Post Ground Receptacle & Plug & Circuit Breaker (2x4 Box) (was p/n 0275510)	C
	Use 0275489	Ref.	220V with CEE 7 Post Ground Receptacle & Plug & Circuit Breaker (70x70 Box) (was p/n 0275515)	D
	Use 0275485	Ref.	220V with CEE 7 Side Ground Receptacle & Plug & Circuit Breaker (2x4 Single Box) (was p/n 0275511)	C
	1001096628	Ref.	220V with CEE 7 Side Ground Receptacle & Plug & Circuit Breaker (2x4 Dual Boxes) **Note: Qty shown is for single Receptacle Box. Double Qty listed for Dual Receptacle Boxes.**	A
	Use 0275490	Ref.	220V with CEE 7 Side Ground Receptacle & Plug & Circuit Breaker (70x70 Box) (was p/n 0275516)	D
		1	Decal - AC Power (Not Shown)	
	1703464		110V	
	3252507		220V	
503A		A/R	Box, Switch Options:	
	0861731	1	0272839, 0275472, 0275485, 0275486 & 1001096628 Installations	
	Not Available	0	0272843 Installation (Purchase Locally)	
	4460315	1	0272839 Installation (Terminal, Spade) (Not Shown)	
	0861781	1	0275487 & 0275488 Installations	

FIGURE 7-3. 2030ES/2630ES ELECTRICAL COMPONENTS INSTALLATION

ITEM #	PART NUMBER	QTY.	DESCRIPTION	REV.
503A cont'd	See Note	1	0275774/0275775 Installations **(Note: Was p/n 0861782 which is no longer available. Use p/n 1001100344 CEE 7 Side Ground Service Kit or p/n 1001100343 CEE 7 Post Ground Service Kit. Kits includes Box p/n 1001141967 & items 503B, 503D & 503E.)**	
	1001141967	1	1001100344,1001100344, 1001141970 & 1001141971 Service Kits	
503B		A/R	Cover Options:	
	1671207	1	0272839 Installation	
	Not Available	0	0272843 Installation (Purchase Locally)	
	4461244	1	0275472 Installation (Includes Receptacle)	
	4461245	1	0275485 & 1001096628 Installations (Includes Receptacle)	
	4461246	1	0275486 Installation (Includes Receptacle)	
	4461198	1	0275487 Installation (Includes Receptacle)	
	4461201	1	0275488 Installation (Includes Receptacle)	
	Use 1001100343	1	0275489 Installation (Includes Receptacle) (was p/n 4461204 & 1001141971)	
	Use 1001100343	1	0275490 Installation (Includes Receptacle) (was p/n 4461207 & 1001141970)	
	1001141968	1	1001100343 & 1001141971 Service Kit	
	1001141969	1	1001100344 & 1001141970 Service Kit	
503C		A/R	Connector, Strain Relief Options:	
	4460662	1	0272839, 0275472, 0275485, 0275486 & 1001096628 Installations	
	Not Available	0	0272843 Installation (Purchase Locally)	
	4461257	1	0275487, 0275488, 0275489 & 0275490 Installations (90°)	
	4461258	1	0275487, 0275488, 0275489 & 0275490 Installations (Adapter)	
	4460633	1	0275520 & 0275521 Installations	
	4460428	1	0275522 & 0275523 Installations	
503D		A/R	Receptacle, Electrical Options:	
	4460346	1	0272839 Installation	
	Not Available	0	0272843 Installation (Purchase Locally)	
	4461244	1	0275472 Installation (Includes Cover)	
	4461245	1	0275485 & 1001096628 Installations (Includes Receptacle)	
	4461246	1	0275486 Installation (Includes Cover)	
	4461198	1	0275487 Installation (Includes Cover)	
	4461201	1	0275488 Installation (Includes Cover)	
	Use 1001100343	1	0275489 Installation (Includes Receptacle) (was p/n 4461204)	
	Use 1001100344	1	0275490 Installation (Includes Receptacle) (was p/n 4461207)	
	1001141968	1	1001100343 & 1001141971 Service Kit	
	1001141969	1	1001100344 & 1001141970 Service Kit	

FIGURE 7-3. 2030ES/2630ES ELECTRICAL COMPONENTS INSTALLATION

ITEM #	PART NUMBER	QTY.	DESCRIPTION	REV.
503E		A/R	Plug End Options:	
	4460138	1	0272839 Installation (Male)	
	Not Available	0	0272843 Installation (Purchase Locally)	
	4461202	1	0275472/0275489 Installations & 1001100343/ 1001141971 Service Kits (Male)	
	4461203	1	0275472/0275489 Installations & 1001100343/ 1001141971 Service Kits (Female)	
	4461205	1	0275485/1001096628 Installations & 1001100344/ 1001141970 Service Kits (Male)	
	4461206	1	0275485 & 1001096628 Installations & 1001100344/ 1001141970 Service Kits (Female)	
	4461249	1	0275486 Installation (Male)	
	4461250	1	0275486 Installation (Female)	
	4461196	1	0275487 Installation (Male)	
	4461197	1	0275487 Installation (Female)	
	4461199	1	0275488 Installation (Male)	
	4461200	1	0275488 Installation (Female)	
	4461202	1	0275489 Installation (Male)	
	4461203	1	0275489 Installation (Female)	
	4461205	1	0275490 Installation (Male)	
	4461206	1	0275490 Installation (Female)	
503F		A/R	Hardware Options:	
	4010405		Screw M4 x 10mm	
	4010408		Screw M4 x 16mm	
	4010612		Screw M6 x 16mm	
	4191706		Screw M6 x 12mm	
	4191708		Screw M6 x 20mm	
	0760619		Screw M6 x 55mm	
	3290405		Locknut M4	
	3290605		Locknut M6	
	3290607		Locknut M6	
	4811400		Flatwasher M4	
	1001091102		Flatwasher M4 Oversize	
	4811700		Flatwasher M6	
503G		A/R	Bracket, Receptacle Box Mounting Options:	
	Not Required	0	0272839, 0272843, 0275472, 0275485, 0275486 & 1001096628 Installations	
	0903569	1	0275487, 0275488, 0275489 & 0275490 Installations	
	0903484	1	1001096628 Installation (2nd Receptacle Box Only)	
503H	0903566	1	Bracket, Circuit Breaker Mounting (Required Only on CE Spec Installations Except 0272843 Installation)	
	01001096627	1	Bracket, Circuit Breaker Mounting (Required Only on CE Spec 1001096628 Installation)	
503J	2902541	A/R	Circuit Breaker Box Assembly (Required Only on CE Spec Installations Except 0272843 Installation):	E
		1	Circuit Breaker Options:	
	1001109475		Circuit Breaker - 16A	
	1001109482		Circuit Breaker - 30mA	
	4460957	1	Terminal Block	
	4460956	1	Barrier, Terminal Block	

FIGURE 7-3. 2030ES/2630ES ELECTRICAL COMPONENTS INSTALLATION

ITEM #	PART NUMBER	QTY.	DESCRIPTION	REV.
503K	1001097150	1	Connector, Strain Relief (Required Only on CE Spec Installations Except 0272843 Installation)	
503L	1060908	55in/1.4m	Cable, Extension (Required Only on CE Spec Installations Except 0272843 Installation)	
503M	1060908	55in/1.4m	Cable, Electrical (Required Only on CE Spec 1001096628 Installation) (Not Shown - Connects 2 Receptacle Boxes)	
			— — — — — — — — — —	
	2902431	1	Receptacle Box Kit (110V GFI) (Includes Item 503A-503D) (0272839 Installation)	C
	0275216	1	Receptacle, Box & Plug Kit (110V IEC Yellow) (Includes Items 503A, 503B, 503C & Male 503E Plug End) (0275487 Installation)	1
	0275217	1	Receptacle, Box & Plug Kit (220V IEC Blue) (Includes Items 503A, 503B, 503D & Male 503E Plug End) (0275488 Installation)	1
	0275452	1	Receptacle Box Kit (220V CEE 7 Post Ground with 2x4 Box) (Includes Items 503A, 503B, 503D & Male 503E Plug End) (0275472 Installation)	1
	Use 1001100343	1	Receptacle, Box & Plug Kit (220V CEE 7 Post Ground with 70x70 Box) (Includes Items 503A, 503B, 503D & 503E) (0275489 Installation) (was p/n 0275218 & 1001141971)	B/A
	0275453	1	Receptacle Box Kit (220V CEE 7 Side Ground with 2x4 Box) (Includes Item 503A, 503B, 503D & Male 503E Plug End) (0275485 & 1001096628 Installations)	1
	Use 1001100344	1	Receptacle, Box & Plug Kit (220V CEE 7 Side Ground with 70x70 Box) (Includes Items 503A, 503B, 503D & 503E) (0275490 Installation) (was p/n 0275219 & 1001141970)	B/A
	0275454	1	Receptacle, Box & Plug Kit (220V AFSINT 107 Keyed Ground) (Includes Items 503A, 503B, 503D & Male 503E Plug End) (0275486 Installation)	1
504		1	Brake Disconnect /Release Switch Components	
504A	4922944	1	Brake Disconnect Harness & Switch	E
	1060680	15ft/2.7m	Cable, Electrical 18/2	
	4240003	1	Strap, Cinch (Not Shown)	
504B	4360613	1	Switch, Limit	
504C	4360387	1	Brake Release Switch	
505		Ref.	Battery Charger/Inverter Components (ANSI & CSA Option Only):	
505A	Not Available	1	AC Output Harness (Internal Part of Inverter)	
505B	Not Available	1	Receptacle, Female - 4 Position (Conxall T9014)	
505C	Not Available	1	AC Input Harness (Internal Part of Inverter)	
505D	Not Available	1	Receptacle, Female - 4 Position (Conxall T9016)	
505E	Not Available	1	Remote Control Harness (Internal Part of Inverter)	
505F	Not Available	1	Plug, Male - 8 Position (Conxall 7281-8PG-300)	
505G	4923389	1	AC Input Harness	C
505H	4460138	1	Plug, Male	
505J	Not Available	1	Plug, Male - 4 Position (Conxall T9017)	
505K	4923390	1	AC Output Harness	D
505L	4460779	1	Receptacle, Female	
505M	Not Available	1	Plug, Male - 4 Position (Conxall T9015)	
505N	4923391	1	Data Interface Harness	D
505P	Not Available	1	Plug, Male - 8 Position (Conxall 6280-8SG-318)	

FIGURE 7-3. 2030ES/2630ES ELECTRICAL COMPONENTS INSTALLATION

ITEM #	PART NUMBER	QTY.	DESCRIPTION	REV.
505R	4460899	1	Receptacle, Female - 6 Position	
	4460464	4	Pin, Male	
	4460466	2	Plug, Seal	
	3990010	1	Diode 6A/600V	
505S	4360336	1	Switch, Toggle	
505T	4460424	2	Receptacle, Female - 2 Position	
	4460267	2	Pin, Male	
505U	4923392	1	Cable, Battery + to Inverter +	A
505V	4923393	1	Cable, Battery – to Inverter –	A
506	1001093556	1	MDI Harness	B
506A	4460321	1	Plug, Male	
	4460226	4	Socket, Female	
506B	4460868	1	Plug, Male - 6 Position	
	4460877	4	Terminal	
	1001094105	1	Boot	
		Ref.	**TOOLS FOR SERVICE**	
601	7002821	1	Crimper, Wire (Not Shown)	
602	7002823	1	Extractor, Pin - Universal (Not Shown)	
603	4460467	A/R	Extractor, Pin #16 Gauge (Not Shown)	
604	4460510	A/R	Extractor, Pin #12 Gauge (Not Shown)	
605	7002828	1	Stripper, Wire (Not Shown)	
606	2901443	1	Analyzer Kit (Not Shown)	
606A	1600244	1	Analyzer	
606B	1060633	1	Cable, Analyzer	
606C	4460321	2	Plug, Male - 4 Position	
	4460226	8	Socket, Female	
607	1001137005	1	Software Cables Kit (Not Shown)	

FIGURE 7-4. 2646ES/3246ES ELECTRICAL COMPONENTS INSTALLATION

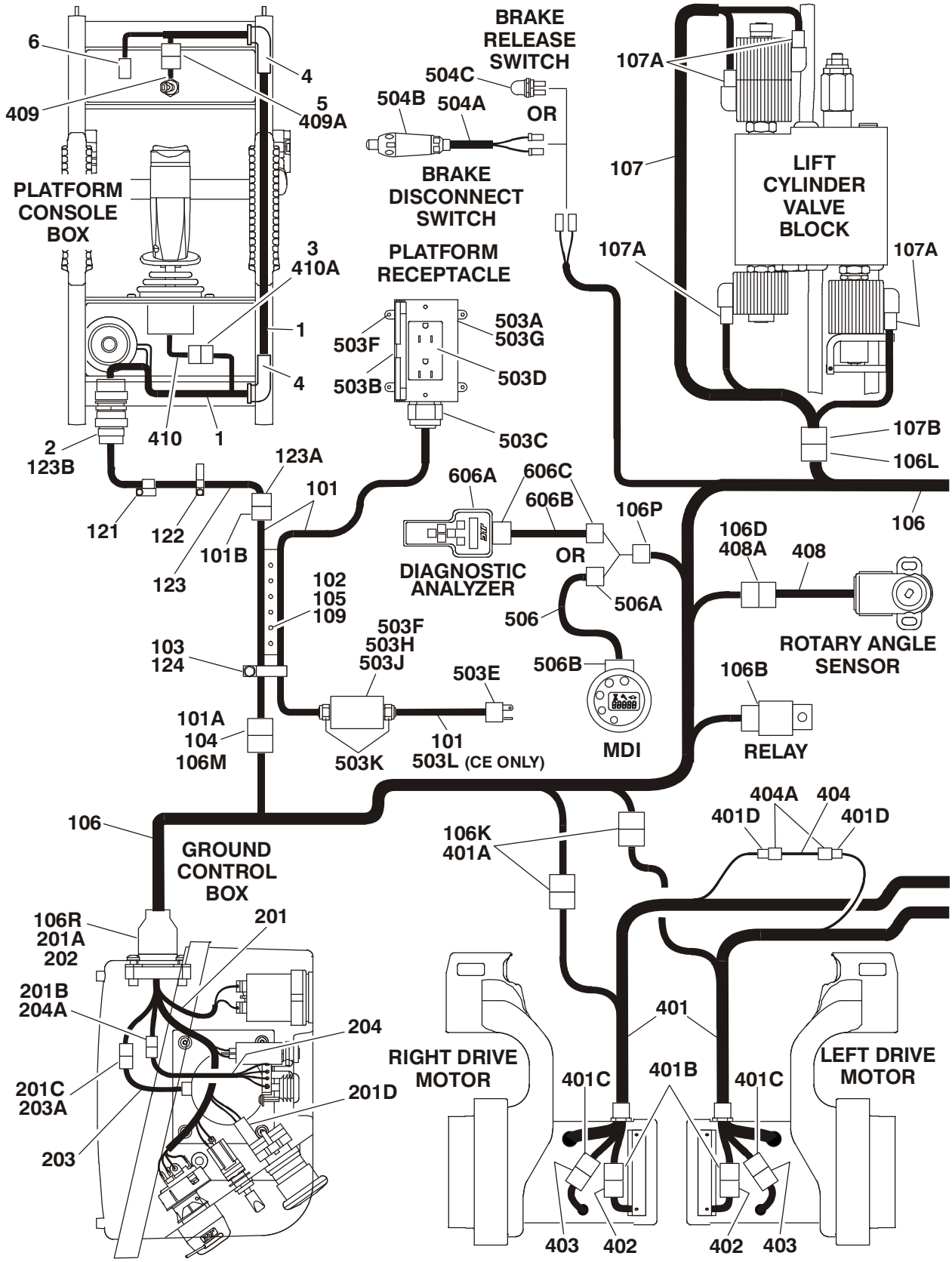

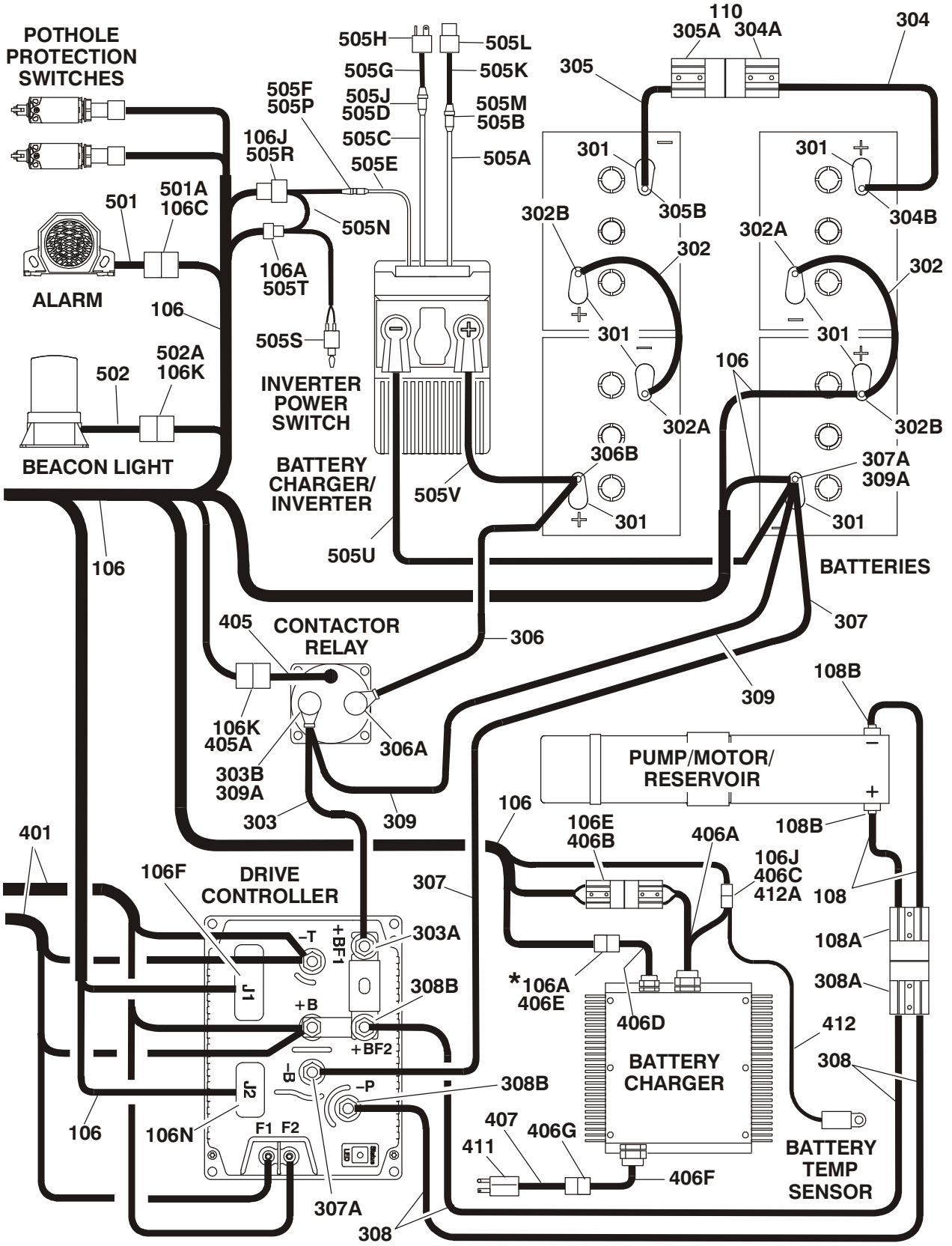

*NOTE: THIS CONNECTION USED ONLY WHEN FOOTSWITCH OR BATTERY CHARGER INTERLOCK OPTIONS ARE REQUIRED.

FIGURE 7-4. 2646ES/3246ES ELECTRICAL COMPONENTS INSTALLATION

ITEM #	PART NUMBER	QTY.	DESCRIPTION	REV.
		Ref.	**CONSOLE BOX COMPONENTS**	
1	4922870	1	Platform Box Harness	B
2	4461016	1	Connector - 14 Position	
	4460464	6	Pin, Male	
	4460466	8	Plug, Sealing	
	4460496	1	Lockwasher	
	4460497	1	Nut, Panel	
3	4460265	1	Plug, Male - 9 Position	
	4460267	8	Pin, Male	
4	2540042	2	Grommet 90°	
5	Not Available	1	Receptacle, Female - 3 Position	
6	4461057	1	Plug, Male - 16 Position	
		Ref.	**PLATFORM CABLES INSTALLATION**	
	1001116632	Ref.	**2646ES/3246ES (ANSI, ANSI Export, Japanese & UL Specs)**	A
	1001116633	Ref.	**2646ES/3246ES (Australian & CE Specs)**	A
101		1	Platform to Ground Harness Options:	
	1001094157		ANSI, ANSI Export, Japanese & UL Specs	C
	1001094335		Australian & CE Specs	B
101A	4460930	1	Plug, Male - 8 Position	
	4460465	4	Socket, Female	
	4460944	3	Socket, Female (Gold)	
	4460466	1	Plug, Sealing	
	0840061	1	Boot, 8 Position Plug	
	2820026	A/R	Insulation, Clear Tubing	
	2820028	A/R	Heat Shrink	
101B	4460930	1	Plug, Male - 8 Position	
	4460465	4	Socket, Female	
	4460944	3	Socket, Female (Gold)	
	4460466	1	Plug, Sealing	
	0840061	1	Boot, 8 Position Plug	
	2820026	A/R	Insulation, Clear Tubing	
	2820028	A/R	Heat Shrink	
102	1380158	21	Retainer	
103	1320318	1	Clamp, Hose	
104	0100048	A/R	Grease, Dielectric	
105	4740545	8	Washer, Special Cable	
106	1001116636	1	Chassis Harness	E
	1001115126		Wiring Diagram - Chassis	A
	3990013	2	Diode 1 Amp/400V (Not Shown)	
106A	4460320	1	Plug, Male - 2 Position (Note: Connection to this plug used only when footswitch or battery interlock options are required)	
	4460226	2	Socket, Female	
106B	1001097347	1	Relay	
	4460374	1	Plug, Relay	
	4460375	3	Terminal	

FIGURE 7-4. 2646ES/3246ES ELECTRICAL COMPONENTS INSTALLATION

ITEM #	PART NUMBER	QTY.	DESCRIPTION	REV.
106C	4460539	1	Plug, Male - 3 Position	
	4460465	2	Socket, Female	
106D	4460539	1	Plug, Male - 3 Position	
	4460465	3	Socket, Female	
106E	4460648	1	Connector, Anderson	
106F	4460873	1	Plug, Male - 35 Position	
	4460871	26	Socket, Female	
106G	Not Used			
106H	Not Used			
106J	4460894	1	Plug, Male - 6 Position	
	4460465	4	Socket, Female	
106K	4460897	4	Receptacle, Female - 2 Position	
	4460464	8	Pin, Male	
106L	4460899	1	Connector, Female - 6 Position	
	4460464	6	Pin, Male	
106M	4460931	1	Receptacle, Female - 8 Position	
	4460464	4	Pin, Male	
	4460943	3	Pin, Male (Gold)	
	0840058	1	Boot	
106N	1001096138	1	Plug, Male - 23 Position	
	4460871	13	Socket, Female	
106P	4460761	1	Receptacle, Female - 4 Position	
	4460227	4	Pin, Male	
106R	1001115076	1	Plug, Male - 18 Position	
	4460465	14	Socket, Female	
	4460942	2	Socket, Female	
107	1001115002	1	Lift Cylinder Harness Options:	B
107A	4460891	4	Plug, Male - 2 Position	
	4460465	8	Socket, Female	
107B	4460894	1	Plug, Male - 6 Position	
	4460465	6	Socket, Female	
	0840059	1	Boot	
108	1001093693	1	Power to Pump Motor Harness	B
108A		1	Connector, Anderson Options:	
	Not Available		Red	
	Not Available		Gray	
108B	0840041	2	Boot, Terminal (Red)	
109		A/R	Screw M6 Options:	
	0760610		20mm Length	
	0760614		30mm Length	
110	4031713	1	Capscrew M6 x 45mm	
	3290605	1	Locknut M6	
111	1001116637	1	Battery Cable Kit (See Item 301- 309 for Breakdown)	
112 to 120	Not Used			
121	1001094175	A/R	Clamp, Post	
	4010616	A/R	Screw M6 x 40mm	
	3290606	A/R	Nut, Acorn M6	

FIGURE 7-4. 2646ES/3246ES ELECTRICAL COMPONENTS INSTALLATION

ITEM #	PART NUMBER	QTY.	DESCRIPTION	REV.
122	1001094180	4	Clamp, Rail	
	0760606	4	Screw M6 x 12mm	
	3290606	4	Nut, Acorn M6	
123	1001096707	1	Platform to Control Box Coiled Cable Harness	A
123A	4460931	1	Receptacle, Female - 8 Position	
	4460464	4	Pin, Male	
	4460943	3	Pin, Male (Gold)	
	4460466	1	Plug, Sealing	
	0840058	1	Boot, 8 Position Receptacle	
	2820026	A/R	Insulation, Clear Tubing	
	2820028	A/R	Heat Shrink	
123B	4460754	1	Connector -14 Position	
	4460465	4	Socket, Female	
	4460944	3	Socket, Female	
	4460466	4	Plug, Sealing	
	3730119	1	Resistor	
	4460493	1	Cap, Dust	
	2820026	A/R	Insulation, Clear Tubing	
124	1321716	2	P-Clamp, Double 1”	
	0700814	A/R	Capscrew M6 x 20mm	
	4751400	A/R	Flatwasher 1/4” Wide	
	3290605	A/R	Locknut M6	
		Ref.	**GROUND CONTROL BOX COMPONENTS**	
201	1001114935	1	Control Box Harness	A
201A	Not Available	1	Receptacle, Female - 18 Position	
	Not Available	16	Socket, Female	
201B	4460961	1	Receptacle, Female - 4 Position	
	4460267	4	Pin, Male	
201C	4461077	1	Plug, Male - 4 Position	
	4460928	4	Socket, Female	
201D	Use 4460418	1	Receptacle, Female - 3 Position	
	Use 4460419	3	Terminal	
202	1001114937	1	Mount, Harness Bulkhead	
203	Use 1001114933	1	Harness, Tilt Sensor (Includes Sensor)	A
203A	4461076	1	Receptacle, Female - 4 Position	
	4460929	4	Pin, Male	
204	Use 0610161	1	Harness, Charger LED (Includes PC Board	
204A	4460321	1	Plug, Male - 4 Position	
	4460268	3	Socket, Female	
	1001116637	Ref.	**BATTERY CABLE KITS**	C
301	0840060	8	Boot, Terminal (Gray) (Covers only the Battery Terminal Base)	
302	1060998	2	Cable, Battery (Battery Positive to Battery Negative)	E
302A	Not Available	2	Boot, Terminal (Black) (1 Per Cable Assembly)	
302B	Not Available	2	Boot, Terminal (Red) (1 Per Cable Assembly)	

FIGURE 7-4. 2646ES/3246ES ELECTRICAL COMPONENTS INSTALLATION

ITEM #	PART NUMBER	QTY.	DESCRIPTION	REV.
303	1001114992	1	Cable, Battery (Contactor to Drive Module B+)	A
303A	Not Available	1	Boot, Terminal (Black)	
303B	Not Available	1	Boot, Terminal (Red)	
304	4923401	1	Cable, Battery (LH Battery to Disconnect)	C
304A	4460618	1	Connector, Anderson	
	Use 2560205	1	Handle, Connector	
304B	Not Available	p1	Boot, Terminal (Red)	
305	4923402	1	Cable, Battery (RH Batteries to Disconnect)	B
305A	4460618	1	Connector, Anderson	
305B	Not Available	1	Boot, Terminal (Black)	
306	4923406	1	Cable, Battery (RH Battery to Contactor)	B
306A	Not Available	1	Boot, Terminal (Black)	
306B	Not Available	1	Boot, Terminal (Red)	
307	4923409	1	Cable, Battery (LH Battery to Connector B–)	B
307A	Not Available	1	Boot, Terminal (Black)	
308	1001096796	2	Cable, Battery (Power to Pump Motor)	B
308A		1	Connector, Anderson Options:	
	Not Available		Redp	
	Not Available		Gray	
308B	0840041	1	Boot, Terminal (Red)	
309	Not Required	1	Cable, Battery (LH Battery to Contactor)	
309A	Not Required	2	Boot, Terminal (Red)	
		Ref.	**STANDARD HARNESSES**	
401		2	Drive Motor/Brake Harness Options:	
	Use 1001134012		Cable USA Built Machines S/N0200198014 to S/N 0200207814 & China Built Machines S/N B200000100 to S/N B200000242 (was p/n 1001091843)	A/G
	1001132439		Cable USA Built Machines S/N 0200207814 to Present & China Built Machines S/N B200000242 to Present	A
401A	4460891	2	Plug, Male - 2 Position (1 Per Harness)	
	4460465	4	Socket, Female (2 Per Harness)	
401B	70001442	2	Plug, Male - 2 Position (1 Per Harness) (To Brake)	
	Not Available	4	Socket, Female (2 Per Harness) (To Brake)	
401C	70001443	2	Plug, Male - 2 Position (1 Per Harness) (To Motor)	
	70001444	4	Socket, Female (2 Per Harness) (To Motor)	
401D	4461261	1	Plug, Male - 1 Position	
	4460509	1	Terminal	
402	Not Available	2	Harness, Brake (Internal Connections - Purchase Complete Brake)	
	Not Available	2	Receptacle, Female - 2 Position (1 Per Harness)	
	Not Available	4	Pin, Male (2 Per Harness)	
403	Not Available	2	Harness, Motor (Internal Connections - Purchase Complete Motor)	
	Not Available	2	Receptacle, Female - 2 Position (1 Per Harness)	
	Not Available	4	Pin, Male (2 Per Harness)	
404	4923602	2	Harness, Field Wire Connection	B
404A	4461260	2	Receptacle, Female - 1 Position	
	4460508	2	Terminal	

FIGURE 7-4. 2646ES/3246ES ELECTRICAL COMPONENTS INSTALLATION

ITEM #	PART NUMBER	QTY.	DESCRIPTION	REV.
405	3740150	1	Contactor Relay Harness (Includes Relay)	
405A	4460891	1	Plug, Male - 2 Position	
	4460465	2	Socket, Female	
406		Ref.	Battery Charger Components	
406A	Not Available		DC Harness/Cord Set	
406B	4460648	1	Plug, Anderson	
406C	4460899	1	Connector, Female - 6 Position	
	4460464	6	Pin, Male	
406D	Not Available	1	Harness with Connector (Note: Connection to this plug used only when battery interlock options are required)	
406E	4460424	1	Connector, Female - 2 Position (Note: Connection to this plug used only when battery interlock options are required)	
	4460227	2	Pin, Male	
406F	Not Available	1	AC Harness/Cord Set	
406G	Not Available	1	Connector, Female	
407		1	Cable, AC Power to Charger Options:	
	1001103257		Cable with Factory Supplied Plug	
	1001103258		Cable with Locally Supplied Plug	
408	1001092354	1	Rotary Angle Sensor and Harness (Separate Harness Not Available) (was p/n 4360526)	
408A	4460536	1	Receptacle, Female - 3 Position	
	4460464	3	Pin, Male	
409	4360539	1	Toggle Switch and Harness (No Separate Harness Available)	
409A	Not Available	1	Plug, Male - 3 Position	
410	Not Available	1	Joystick Harness	
410A	4460266	1	Receptacle, Female - 9 Position	
	4460226	8	Socket, Female	
411		1	Plug Options:	
	Not Available		ANSI Spec Plug (Use p/n 1001103257)	
	Not Available		Australian & Japanese Specs (Purchase Locally)	
			CE Spec Options:	
	0275666	Ref.	IEC Yellow Receptacle Installation	A
	4461196		Receptacle, IEC Yellow	
	0276667	Ref.	IEC Blue Receptacle Installation	A
	4661199		Receptacle, IEC Blue	
	0275665	Ref.	AFSINT 107 Keyed Ground Receptacle Installation	A
	4661249		Receptacle, AFSINT 107 Keyed Ground	
	0275663	Ref.	CEE 7 Post Ground Receptacle Installation	A
	4661202		Receptacle, CEE 7 Post Ground	
	0275664	Ref.	CEE 7 Side Ground Receptacle Installation	A
	4661205		Receptacle, CEE 7 Side Ground	
412	Use 1001127269	1	Battery Temperature Sensor Harness (Includes Sensor and Instructions) (was p/n 1001112113)	
412A	4460465	2	Socket, Female	
		Ref.	**OPTIONAL HARNESSES**	
501	0140043	1	Alarm and Harness (Separate Harness Not Available)	
501A	4460536	1	Receptacle, Female - 3 Position	
	4460464	3	Pin, Male	

FIGURE 7-4. 2646ES/3246ES ELECTRICAL COMPONENTS INSTALLATION

ITEM #	PART NUMBER	QTY.	DESCRIPTION	REV.
502	2920161	1	Beacon Light and Harness (Separate Harness Not Available)	
502A	4460891	1	Plug, Male - 2 Position (1 Per Harness)	
	4460465	2	Socket, Female (2 Per Harness)	
503		Ref.	Platform Electrical Outlet Components	
		Ref.	ANSI, ANSI Export, CSA, Japanese & UL Specs Options:	
	0272839	Ref.	110V with Receptacle & Plug	H
	0272843	Ref.	220V without Receptacle & Plug (Locally Supplied Components)	F
		Ref.	Australian Specs Options:	
	0272843	Ref.	220V without Receptacle & Plug (Locally Supplied Components)	F
		Ref.	CE Specs Options:	
	Use 0275487	Ref.	110V with IEC Yellow Receptacle & Plug & Circuit Breaker (was p/n 0275520)	C
	0272843	Ref.	220V without Receptacle & Plug (Locally Supplied Components) (All Models)	F
	Use 0275488	Ref.	220V with IEC Blue Receptacle & Plug & Circuit Breaker (was p/n 0275521)	C
	Use 0275486	Ref.	220V with AFSINT 107 Keyed Ground Receptacle & Plug & Circuit Breaker (was p/n 0275519)	C
	Use 0275472	Ref.	220V with CEE 7 Post Ground Receptacle & Plug & Circuit Breaker (2x4 Box) (was p/n 0275517)	C
	Use 0275489	Ref.	220V with CEE 7 Post Ground Receptacle & Plug & Circuit Breaker (70x70 Box) (was p/n 0275522)	D
	Use 0275485	Ref.	220V with CEE 7 Side Ground Receptacle & Plug & Circuit Breaker (2x4 Single Box) (was p/n 0275518)	C
	1001096628	Ref.	220V with CEE 7 Side Ground Receptacle & Plug & Circuit Breaker (2x4 Dual Boxes) **Note: Qty shown is for single Receptacle Box. Double Qty listed for Dual Receptacle Boxes.**	A
	Use 0275490	Ref.	220V with CEE 7 Side Ground Receptacle & Plug & Circuit Breaker (70x70 Box) (was p/n 0275523)	D
		1	Decal - AC Power (Not Shown)	
	1703464		110V	
	3252507		220V	
503A		A/R	Box, Switch Options:	
	0861731	1	0272839, 0275472, 0275485, 0275486 & 1001096628 Installations	
	Not Available	0	0272843 Installation (Purchase Locally)	
	4460315	1	0272839 Installation (Terminal, Spade) (Not Shown)	
	0861781	1	0275487 & 0275488 Installations	
	See Note	1	0275774/0275775 Installations **(Note: Was p/n 0861782 which is no longer available. Use p/n 1001100344 CEE 7 Side Ground Service Kit or p/n 1001100343CEE 7 Post Ground Service Kit. Kits includes Box p/n 1001141967 & items 503B, 503D & 503E.)**	
	1001141967	1	1001100343, 1001100344, 1001141970 & 1001141971 Service Kits	

FIGURE 7-4. 2646ES/3246ES ELECTRICAL COMPONENTS INSTALLATION

ITEM #	PART NUMBER	QTY.	DESCRIPTION	REV.
503B		A/R	Cover Options:	
	1671207	1	0272839 Installation	
	Not Available	0	0272843 Installation (Purchase Locally)	
	4461244	1	0275472 Installation (Includes Receptacle)	
	4461245	1	0275485 & 1001096628 Installations (Includes Receptacle)	
	4461246	1	0275486 Installation (Includes Receptacle)	
	4461198	1	0275487 Installation (Includes Receptacle)	
	4461201	1	0275488 Installation (Includes Receptacle)	
	Use 1001100343	1	0275489 Installation (Includes Receptacle) (was p/n 4461204 & 1001141971)	
	Use 1001100344	1	0275490 Installation (Includes Receptacle) (was p/n 4461207 & 1001141970)	
	1001141968	1	1001100343 & 1001141971 Service Kits	
	1001141969	1	1001100343 & 1001141970 Service Kits	
503C		A/R	Connector, Strain Relief Options:	
	4460662	1	0272839, 0275472, 0275485, 0275486 & 1001096628 Installations	
	Not Available	0	0272843 Installation (Purchase Locally)	
	4461257	1	0275487, 0275488, 0275489 & 0275490 Installations (90°)	
	4461258	1	0275487, 0275488, 0275489 & 0275490 Installations (Adapter)	
	4460633	1	0275520 & 0275521 Installations	
	4460428	1	0275522 & 0275523 Installations	
503D		A/R	Receptacle, Electrical Options:	
	4460346	1	0272839 Installation	
	Not Available	0	0272843 Installation (Purchase Locally)	
	4461244	1	0275472 Installation (Includes Cover)	
	4461245	1	0275485 & 1001096628 Installations (Includes Receptacle)	
	4461246	1	0275486 Installation (Includes Cover)	
	4461198	1	0275487 Installation (includes Cover	
	4461201	1	0275488 Installation (Includes Cover)	
	Use 1001100343	1	0275489 Installation (Includes Receptacle) (was p/n 4461204 & 1001141971)	
	Use 1001100344	1	0275490 Installation (Includes Receptacle) (was p/n 4461207 & 1001141970)	
	1001141968	1	1001100343 & 1001141971 Service Kits	
	1001141969	1	1001100343 & 1001141970 Service Kits	
503E		A/R	Plug End Options:	
	4460138	1	0272839 Installation (Male)	
	Not Available	0	0272843 Installation (Purchase Locally)	
	4461202	1	0275472/0275489 Installations & 1001100343/ 1001141971 Service Kits (Male)	
	4461203	1	0275472/0275489 Installations & 1001100343/ 1001141971 Service Kits (Female)	
	4461205	1	0275485/1001096628 Installations & 1001100344/ 1001141970 Service Kits (Male)	
	4461206	1	0275485/1001096628 Installations & 1001100344/ 1001141970 Service Kits (Female)	

FIGURE 7-4. 2646ES/3246ES ELECTRICAL COMPONENTS INSTALLATION

ITEM #	PART NUMBER	QTY.	DESCRIPTION	REV.
503 cont'd	4461249	1	0275486 Installation (Male)	
	4461250	1	0275486 Installation (Female)	
	4461196	1	0275487 Installation (Male)	
	4461197	1	0275487 Installation (Female)	
	4461199	1	0275488 Installation (Male)	
	4461200	1	0275488 Installation (Female)	
	4461202	1	0275489 Installation (Male)	
	4461203	1	0275489 Installation (Female)	
	4461205	1	0275490 Installation (Male)	
	4461206	1	0275490 Installation (Female)	
503F		A/R	Hardware Options:	
	4010405		Screw M4 x 10mm	
	4010408		Screw M4 x 16mm	
	4010612		Screw M6 x 16mm	
	4191706		Screw M6 x 12mm	
	4191708		Screw M6 x 20mm	
	0760619		Screw M6 x 55mm	
	3290405		Locknut M4	
	3290605		Locknut M6	
	3290607		Locknut M6	
	4811400		Flatwasher M4	
	1001091102		Flatwasher M4 Oversize	
	4811700		Flatwasher M6	
503G		A/R	Bracket, Receptacle Box Mounting Options:	
	Not Required	0	0272839, 0272843, 0275472, 0275485, 0275486 & 1001096628 Installations	
	0903569	1	0275487, 0275488, 0275489 & 0275490 Installations	
	0903484	1	1001096628 Installation (2nd Receptacle Box Only)	
503H	0903566	1	Bracket, Circuit Breaker Mounting (Required Only on CE Spec Installations Except 0272843 Installation)	
	1001096627	1	Bracket, Circuit Breaker Mounting (Required Only on CE Spec 1001096628 Installation)	
503J	2902541	A/R	Circuit Breaker Box Assembly (Required Only on CE Spec Installations Except 0272843 Installation):	E
		1	Circuit Breaker Options:	
	1001109475		Circuit Breaker - 16A	
	1001109482		Circuit Breaker - 30mA	
	4460957	1	Terminal Block	
	4460956	1	Barrier, Terminal Block	
503K	1001097150	1	Connector, Strain Relief (Required Only on CE Spec Installations Except 0272843 Installation)	
503L	1060908	55in/1.4m	Cable, Extension (Required Only on CE Spec Installations Except 0272843 Installation)	
503M	1060908	55in/1.4m	Cable, Electrical (Required Only on CE Spec 1001096628 Installation) (Not Shown - Connects 2 Receptacle Boxes)	
			— — — — — — — — — —	
	2902431	1	Receptacle Box Kit (110V GFI) (Includes Item 503A-503D) (0272839 Installation)	C
	0275216	1	Receptacle, Box & Plug Kit (110V IEC Yellow) (Includes Items 503A, 503B, 503C & Male 503E Plug End) (0275487 Installation)	1

FIGURE 7-4. 2646ES/3246ES ELECTRICAL COMPONENTS INSTALLATION

ITEM #	PART NUMBER	QTY.	DESCRIPTION	REV.
	0275217	1	Receptacle, Box & Plug Kit (220V IEC Blue) (Includes Items 503A, 503B, 503D & Male 503E Plug End) (0275488 Installation)	1
	0275452	1	Receptacle Box Kit (220V CEE 7 Post Ground with 2x4 Box) (Includes Items 503A, 503B, 503D & Male 503E Plug End) (0275472 Installation)	1
	Use 1001141971	1	Receptacle, Box & Plug Kit (220V CEE 7 Post Ground with 70x70 Box) (Includes Items 503A, 503B, 503D & 503E) (0275489 Installation) (was p/n 0275218 & 1001141971)	B/A
	0275453	1	Receptacle Box Kit (220V CEE 7 Side Ground with 2x4 Box) (Includes Item 503A, 503B, 503D & Male 503E Plug End) (0275485 & 1001096628 Installation)	1
	Use 1001141970	1	Receptacle, Box & Plug Kit (220V CEE 7 Side Ground with 70x70 Box) (Includes Items 503A, 503B, 503D & 503E) (0275490 Installation) (was p/n 0275219 & 1001141970)	B/A
	0275454	1	Receptacle, Box & Plug Kit (220V AFSINT 107 Keyed Ground) (Includes Items 503A, 503B, 503D & Male 503E Plug End) (0275486 Installation)	1
504		1	Brake Disconnect /Release Switch Components	
504A	4922944	1	Brake Disconnect Harness & Switch	E
	1060680	15ft/2.7m	Cable, Electrical 18/2	
	4240003	1	Strap, Cinch (Not Shown)	
504B	4360613	1	Switch, Limit	
504C	4360387	1	Brake Release Switch	
505		Ref.	Battery Charger/Inverter Components (ANSI & CSA Option Only):	
505A	Not Available	1	AC Output Harness (Internal Part of Inverter)	
505B	Not Available	1	Receptacle, Female - 4 Position (Conxall T9014)	
505C	Not Available	1	AC Input Harness (Internal Part of Inverter)	
505D	Not Available	1	Receptacle, Female - 4 Position (Conxall T9016)	
505E	Not Available	1	Remote Control Harness (Internal Part of Inverter)	
505F	Not Available	1	Plug, Male - 8 Position (Conxall 7281-8PG-300)	
505G	4923389	1	AC Input Harness	C
505H	4460138	1	Plug, Male	
505J	Not Available	1	Plug, Male - 4 Position (Conxall T9017)	
505K	4923390	1	AC Output Harness	D
505L	4460779	1	Receptacle, Female	
505M	Not Available	1	Plug, Male - 4 Position (Conxall T9015)	
505N	4923391	1	Data Interface Harness	D
505P	Not Available	1	Plug, Male - 8 Position (Conxall 6280-8SG-318)	
505R	4460899	1	Receptacle, Female - 6 Position	
	4460464	4	Pin, Male	
	4460466	2	Plug, Seal	
	3990010	1	Diode 6A/600V	
505S	4360336	1	Switch, Toggle	
505T	4460424	2	Receptacle, Female - 2 Position	
	4460267	2	Pin, Male	
505U	4923392	1	Cable, Battery + to Inverter +	A
505V	4923393	1	Cable, Battery – to Inverter –	A

FIGURE 7-4. 2646ES/3246ES ELECTRICAL COMPONENTS INSTALLATION

ITEM #	PART NUMBER	QTY.	DESCRIPTION	REV.
506	1001093556	1	MDI Harness	B
506A	4460321	1	Plug, Male	
	4460226	4	Socket, Female	
506B	4460868	1	Plug, Male - 6 Position	
	4460877	4	Terminal	
	1001094105	1	Boot	
		Ref.	**TOOLS FOR SERVICE**	
601	7002821	1	Crimper, Wire (Not Shown)	
602	7002823	1	Extractor, Pin - Universal (Not Shown)	
603	4460467	A/R	Extractor, Pin #16 Gauge (Not Shown)	
604	4460510	A/R	Extractor, Pin #12 Gauge (Not Shown)	
605	7002828	1	Stripper, Wire (Not Shown)	
606	2901443	1	Analyzer Kit (Not Shown)	
606A	1600244	1	Analyzer	
606B	1060633	1	Cable, Analyzer	
606C	4460321	2	Plug, Male - 4 Position	
	4460226	8	Socket, Female	
607	1001137005	1	Software Cables Kit (Not Shown)	

FIGURE 7-4. 2646ES/3246ES ELECTRICAL COMPONENTS INSTALLATION

ITEM #	PART NUMBER	QTY.	DESCRIPTION	REV.

SECTION 8
DECALS

FIGURE 8-1. DECAL INSTALLATION (ANSI SPEC)

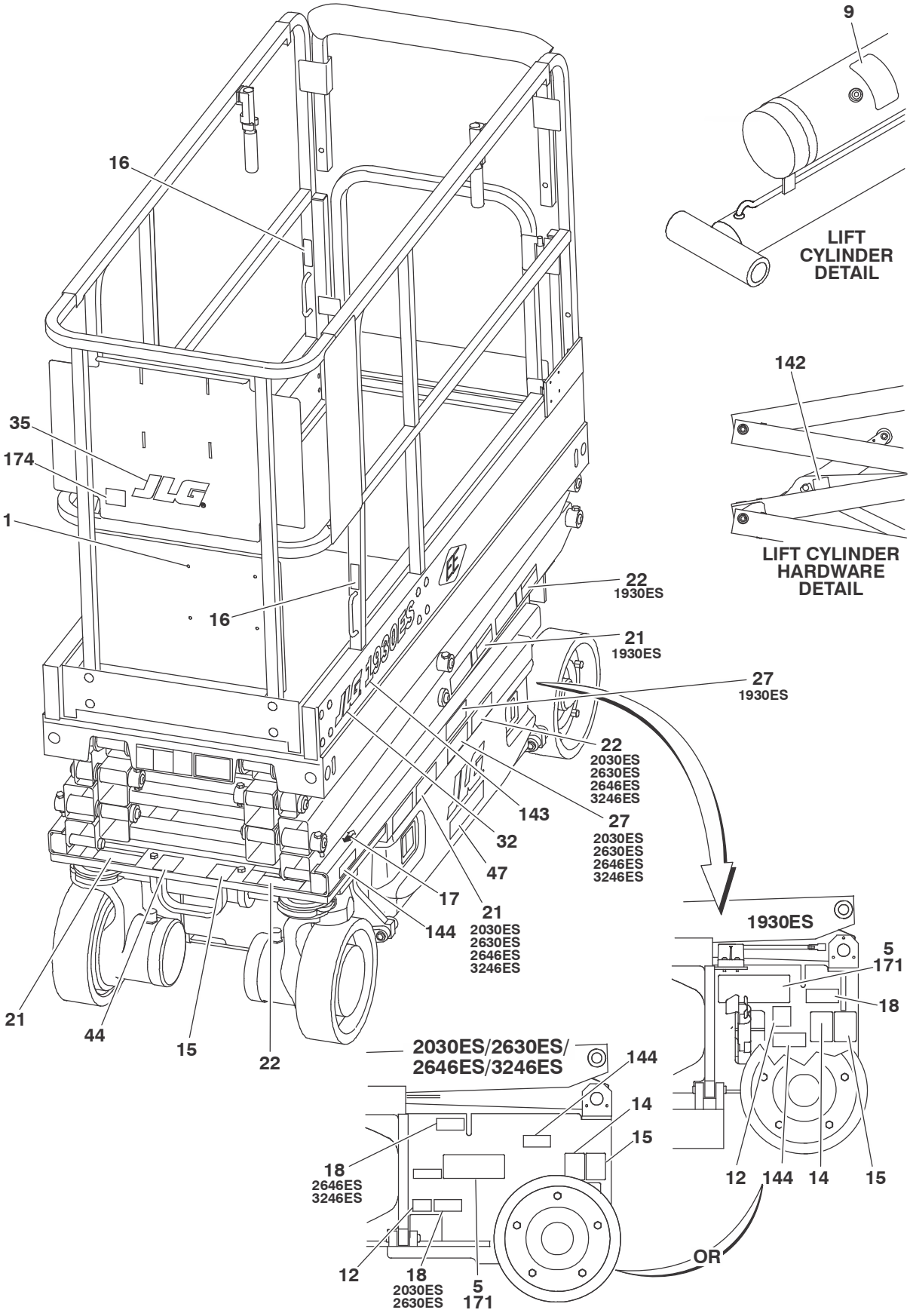

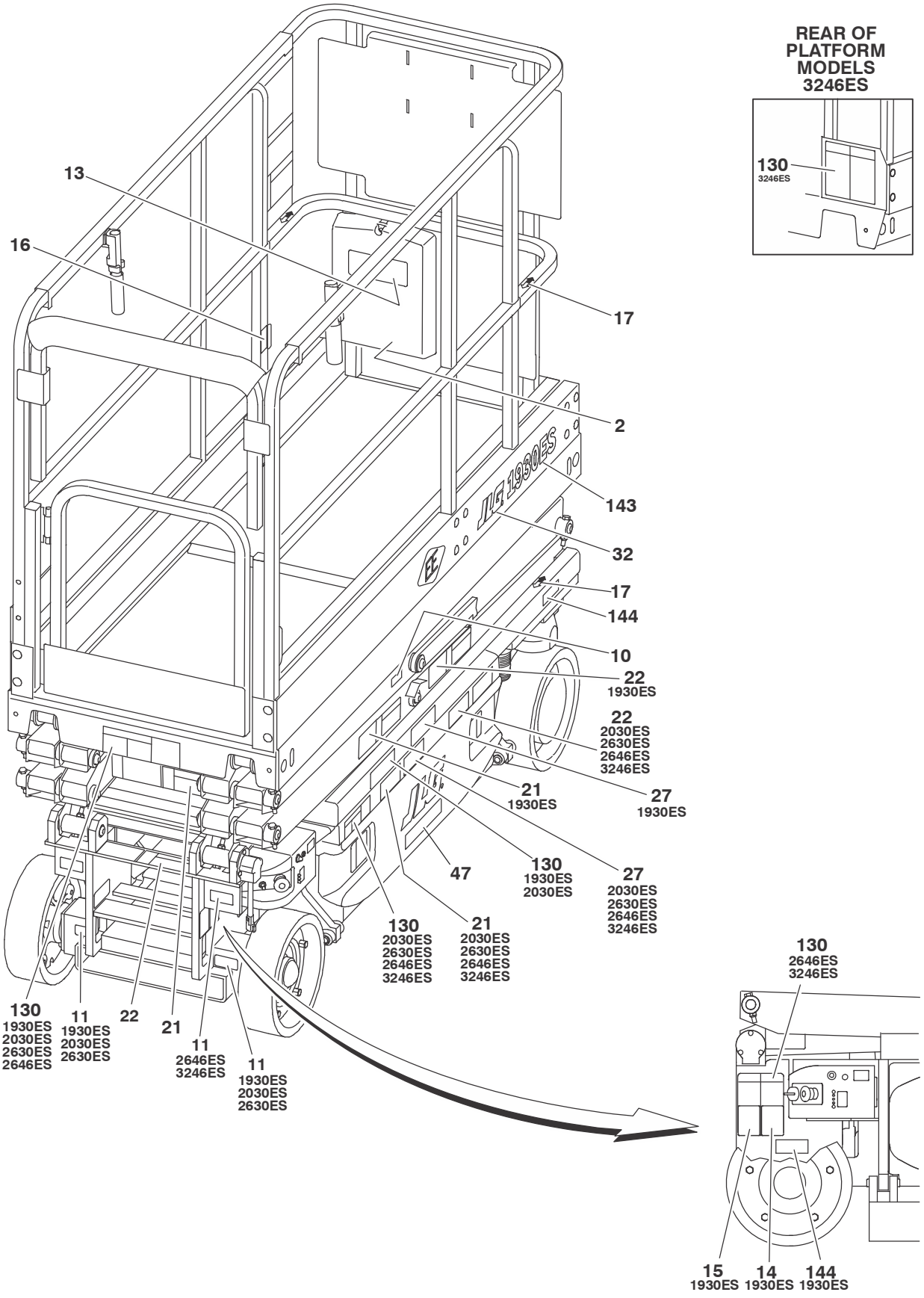
REAR OF PLATFORM MODELS 3246ES
130
3246ES
13
16
17
2
143
32
17
144
10
22
1930ES
22
2030ES
2630ES
2646ES
3246ES
21
1930ES
27
1930ES
47
130
1930ES
2030ES
27
2030ES
2630ES
2646ES
3246ES
130
2030ES
2630ES
2646ES
3246ES
21
2030ES
2630ES
2646ES
3246ES
130
1930ES
2030ES
2630ES
2646ES
11
1930ES
2030ES
2630ES
22
21
11
2646ES
3246ES
11
1930ES
2030ES
2630ES
130
2646ES
3246ES
15
1930ES
14
1930ES
144
1930ES

PLATFORM DECAL PANEL DETAILS

MODEL 1930ES

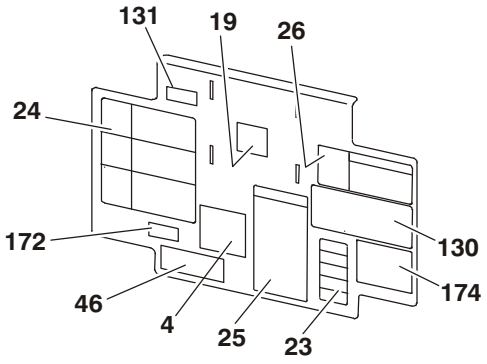

MODELS 2030ES & 2630ES

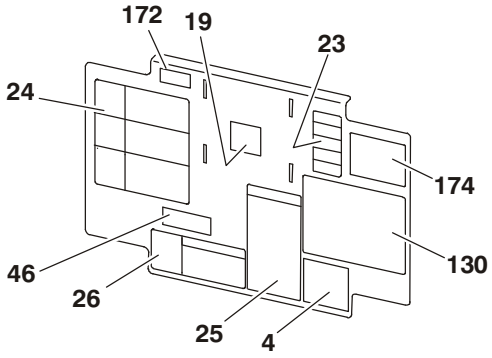

MODELS 2646ES & 3246ES

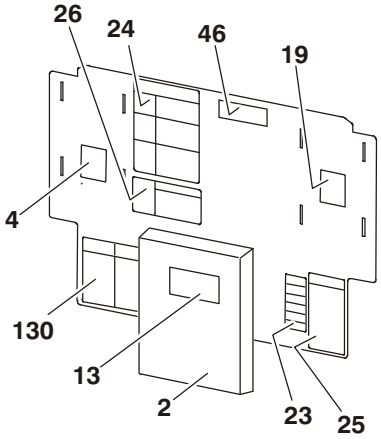

FIGURE 8-1. DECAL INSTALLATION (ANSI SPEC)

ITEM #	PART NUMBER	QTY.	DESCRIPTION	REV.
		Ref.	**DECALS INSTALLATION**	
	0275220	Ref.	**1930ES/2030ES/2630ES/2646ES/3246ES**	B
	0272870	Ref.	**JLG Decals**	2
1	2080040	4	Fastener	
2	0860520	1	Box, Manual Storage	
3	Not Used			
4		1	Decal - Patent Options:	
	1700584		USA Built Machines S/N 0200198014 to S/N 0200205405 & China Built Machines S/N B200000100 to S/N B200003185	
	1001131270		USA Built Machines S/N 0200205405 to Present & China Built Machines S/N B200003185 to Present	
5	2080057	4	Fastener	
6 to 8	Not Used	1		
9	1704412	1	Decal - Hydraulic Oil	
10	1705693	1	Decal - Safety Prop	
11	1704016	2	Decal - Forklift	
12	1702155	1	Decal - Battery Disconnect	
13	1701509	1	Decal - Manual Reference	
14	1703811	4	Decal - Lifting Lugs	
15	1703814	3	Decal - Tie Down	
16	1704277	3	Decal - Attach Lanyard Here	
17	1703819	4	Decal - Directional Arrow	
18	1703822	1	Decal - Manual Descent	
19	1705692	1	Decal - Control Box Location	
20	Not Used			
21	1705694	4	Decal - Crushing Hazard	
22	1705695	4	Decal - Danger Electrocution	
23	1705686	1	Decal - Legend	
24	1705680	1	Decal - Danger/Warning	
25	1705679	1	Decal - Inspection	
26	1705681	1	Decal - Electrocution	
27	1703813	2	Decal - Warning Battery Vent	
28 to 31	Not Used			
32	1705781	2	Decal - JLG	
33 to 34	Not Used			
35	1702773	1	Decal - JLG	
36 to 38	Not Used			
39		1	Decal - AC Power Options:	
	1703464		120-60Hz	
	3252507		220V-50/60Hz	
40 to 43	Not Used			
44	1701499	1	Decal - No Lift	
45	Not Used			
46	1001094359	1	Decal - Troubleshooting	
47	1001146794	2	Decal - Battery Service (USA Built Machines S/N 0200215384 to Present & China Built Machines S/N B200011011 to Present Only)	
			— — — — — — — — — —	

FIGURE 8-1. DECAL INSTALLATION (ANSI SPEC) (CONTINUED)

ITEM #	PART NUMBER	QTY.	DESCRIPTION	REV.
	2902267	1	Decal Kit 1 (Includes Items 9-19 & 44)	8
	2902522	1	Decal Kit 2 (Includes Items 21-27 & 39)	2
	0010588	Ref.	**DECAL OPTIONS**	
101 to 129	Not Used			
130		A/R	Decal - Capacity Options:	
			1930ES:	
	1705638	2	500lbs/227kg (Platform Box & Platform Entry Locations)	
	1705699	1	500lbs/227kg (Ground Control Box Location)	
	1705639	3	2030ES: 800lbs/363kg (All Locations)	
			2630ES:	
	1705941	1	Platform Console Box Decal - 500lb/227kg & 800lb/360kg	
	1705880	1	Platform Entry Decal - 500lb/227kg & 800lb/360kg	
	1705941	1	Ground Control Box - 500lb/227kg & 800lb/360kg	
	1705640	3	2646ES: 1000lbs/454kg	
	1705641	3	3246ES: 700lbs/317kg	
131		1	Decal - No Pipe Racks/Panel Carriers Options:	
	1001092071		1930ES	
	Not Required		2030ES/2630ES/2646ES/3246ES	
132 to 141	Not Used			
142	1001116915	1	Decal - Hardware Retention (was p/n 1001116928)	
143		2	Decal - Model Designation Options:	
	1001099919		1930ES	
	1001099920		2030ES	
	1001099921		2630ES	
	1001099922		2646ES	
	1001099923		3246ES	
144		4	Decal - Max Tire Load Options:	
	1705647		1930ES	
	1706310		2030ES/2630ES	
	1706311		2646ES/3246ES	
145 to 170	Not Used			
171	Not Available		Nameplate - Serial Number	
172 to 173	Not Used			
174	3251813	1	Decal - Made in USA	
			— — — — — — — — — —	
		1	Complete Decal Kit Options (Includes Items 4, 9-46 & 130-174):	
	1001149795		1930ES	A
	1001149796		2030ES	A
	1001149797		2630ES	A
	1001149798		2646ES	A
	1001149799		3246ES	A

FIGURE 8-1. DECAL INSTALLATION (ANSI SPEC) (CONTINUED)

ITEM #	PART NUMBER	QTY.	DESCRIPTION	REV.

FIGURE 8-2.DECALS INSTALLATIONS (ANSI EXPORT SPEC)

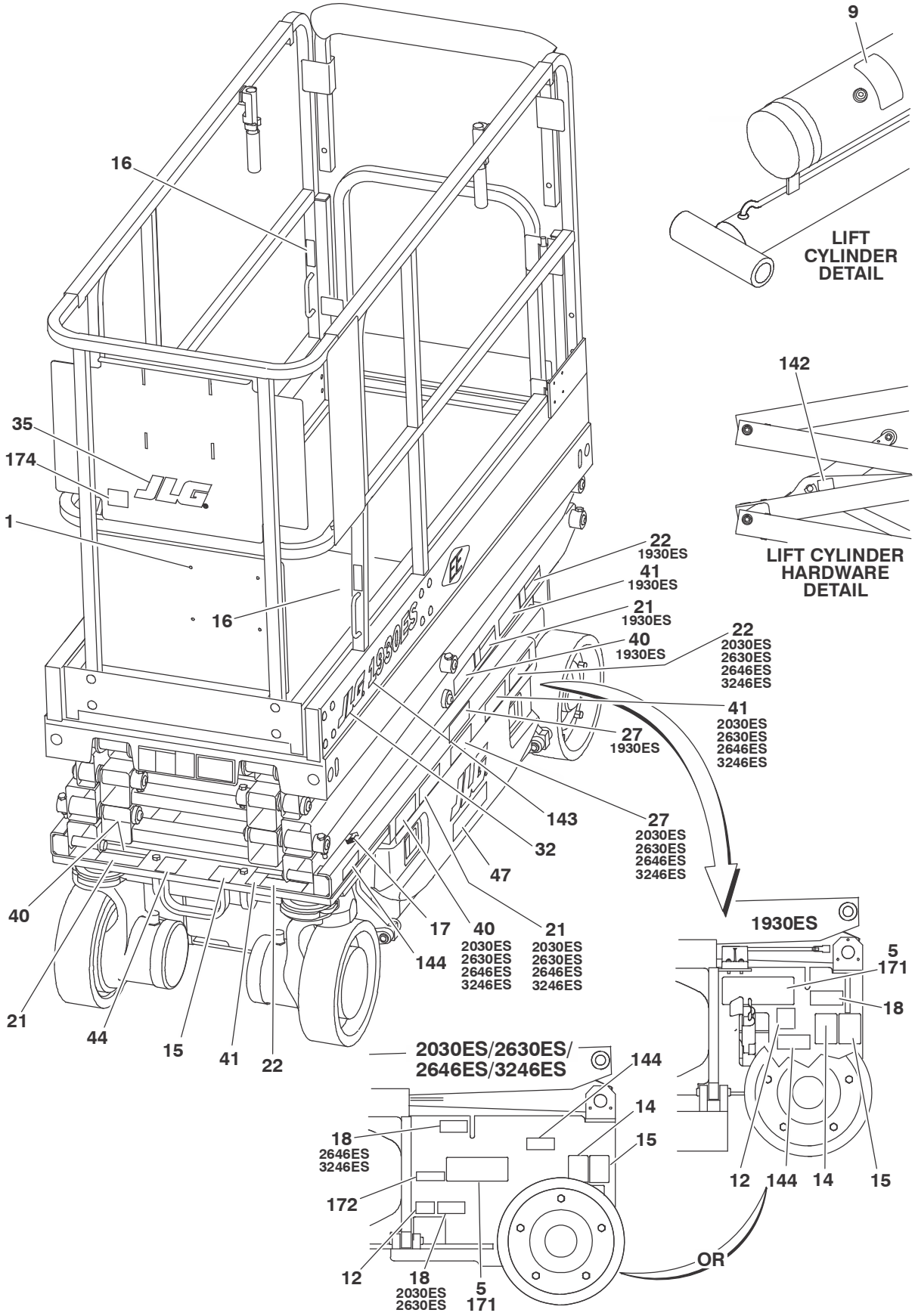

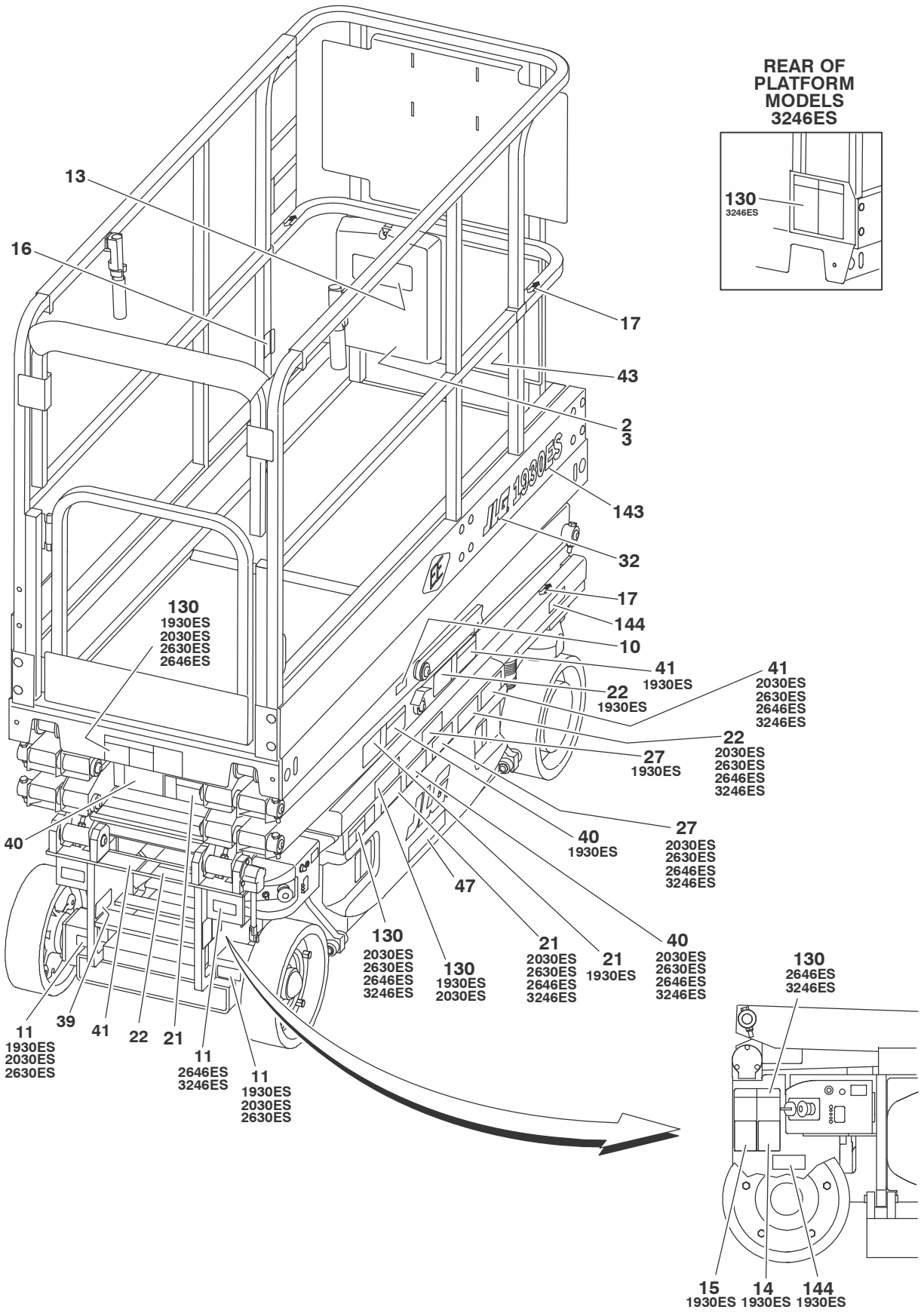
REAR OF PLATFORM MODELS 3246ES
130
3246ES
13
16
17
43
2
3
143
32
17
144
10
41
1930ES
22
1930ES
41
2030ES
2630ES
2646ES
3246ES
22
2030ES
2630ES
2646ES
3246ES
27
1930ES
27
2030ES
2630ES
2646ES
3246ES
40
1930ES
40
2030ES
2630ES
2646ES
3246ES
130
1930ES
2030ES
2630ES
2646ES
40
47
130
2030ES
2630ES
2646ES
3246ES
130
1930ES
2030ES
21
2030ES
2630ES
2646ES
3246ES
21
1930ES
11
1930ES
2030ES
2630ES
39
41
22
21
11
2646ES
3246ES
11
1930ES
2030ES
2630ES
130
2646ES
3246ES
15
1930ES
14
1930ES
144
1930ES

PLATFORM DECAL PANEL DETAILS

MODEL 1930ES

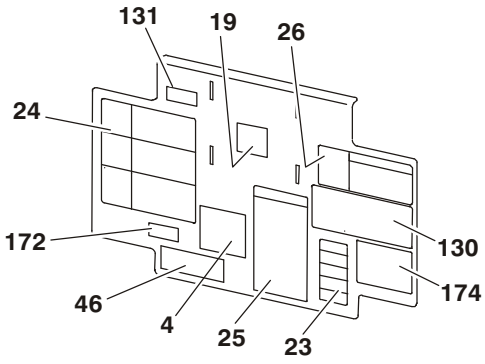

MODELS 2030ES & 2630ES

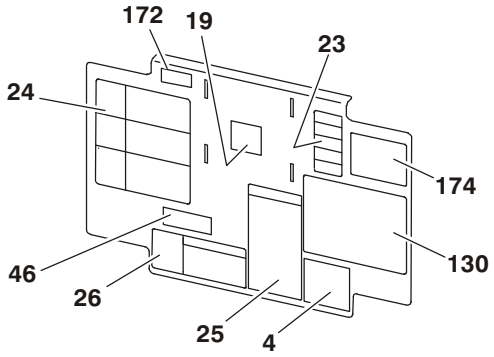

MODELS 2646ES & 3246ES

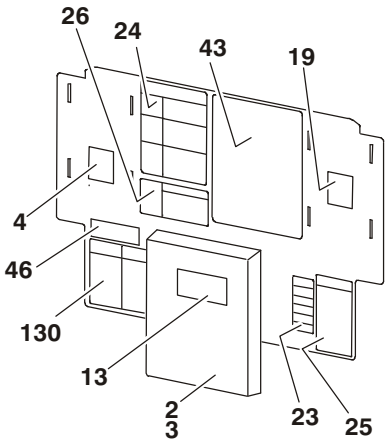

FIGURE 8-2. DECALS INSTALLATIONS (ANSI EXPORT SPEC)

ITEM #	PART NUMBER	QTY.	DESCRIPTION	REV.
		Ref.	**DECALS INSTALLATION - ANSI EXPORT SPECS**	
	0275225	Ref.	**Brazilian Spec (Portuguese/Spanish Spec)**	B
	0275226	Ref.	**Chinese Specs (English/Chinese Spec)**	B
	0275223	Ref.	**CSA Spec (English/French)**	B
	0275227	Ref.	**Korean Spec**	B
	0275224	Ref.	**Latin American Spec (English/Spanish)**	B
	0272870	Ref.	**JLG Decals**	2
1	2080040	4	Fastener	
2	0860520	1	Box, Manual Storage	
3	1060279	1	Cable, Lanyard	
4		1	Decal - Patent Options:	
	1700584		All Specs Except CSA Spec (USA Built Machines S/N 0200198014 to S/N 0200205405 & China Built Machines S/N B200000100 to S/N B200003185)	
			CSA Spec	
	1700584		USA Built Machines S/N 0200198014 to S/N 0200205405 & China Built Machines S/N B200000100 to S/N B200003185	
	1001131270		USA Built Machines S/N 0200205405 to Present & China Built Machines S/N B200003185 to Present	
5	2080057	4	Fastener	
6 to 8	Not Used	1		
9	1704412	1	Decal - Hydraulic Oil	
10	1705693	1	Decal - Safety Prop	
11	1704016	2	Decal - Forklift	
12	1702155	1	Decal - Battery Disconnect	
13	1701509	1	Decal - Manual Reference	
14	1703811	3	Decal - Lifting Lugs	
15	1703814	3	Decal - Tie Down	
16	1704277	3	Decal - Attach Lanyard Here	
17	1703819	4	Decal - Directional Arrow	
18	1703822	1	Decal - Manual Descent	
19	1705692	1	Decal - Control Box Location	
20	Not Used			
21		4	Decal - Crushing Hazard	
	1705694		All Specs Except Brazilian Spec	
	1705722		Brazilian Spec	
22		4	Decal - Danger Electrocution	
	1705695		All Specs Except Brazilian Spec	
	1703834		Brazilian Spec	
23		1	Decal - Legend	
	1705726		Brazilian Spec	
	1705946		Chinese Spec	
	1705723		CSA Spec	
	1706057		Korean Spec	
	1705720		Latin American Spec	
24		1	Decal - Danger/Warning	
	1705680		All Specs Except Brazilian Spec	
	1705894		Brazilian Spec	

FIGURE 8-2. DECALS INSTALLATIONS (ANSI EXPORT SPEC) (CONTINUED)

ITEM #	PART NUMBER	QTY.	DESCRIPTION	REV.
25		1	Decal - Inspection	
	1705679		All Specs Except Brazilian Spec	
	1705727		Brazilian Spec	
26		1	Decal - Electrocution	
	1705681		All Specs Except Brazilian Spec	
	1705721		Brazilian Spec	
27		2	Decal - Warning Battery Vent	
	1704341		Brazilian Spec	
	1704344		Chinese Spec	
	1704340		CSA Spec	
	1703856		Korean Spec	
	1704339		Latin American Spec	
28 to 31	Not Used			
32	1705781	2	Decal - JLG	
33 to 34	Not Used			
35	1702773	1	Decal - JLG	
36 to 38	Not Used			
39		1	Decal - AC Power Options:	
	1703464		120-60Hz	
	3252507		220V-50/60Hz	
40		4	Decal - Crushing Hazard Options:	
	1705725		Brazilian & Latin American Specs	
	1705717		CSA Spec	
	1705943		Chinese Spec	
	1706052		Korean Spec	
41		4	Decal - Electrocution Options:	
	1705724		Brazilian & Latin American Specs	
	1705718		CSA Spec	
	1705944		Chinese Spec	
	1706056		Korean Spec	
42	Not Used			
43		1	Decal - Warning/Danger Options:	
	1705719		Brazilian & Latin American Specs	
	3252098		CSA Spec (English/French)	
	1705945		Chinese Spec	
	1706053		Korean Spec	
44	1701499	1	Decal - No Lift	
45	Not Used			
46	1001094359	1	Decal - Troubleshooting	
47	1001146794	2	Decal - Battery Service (USA Built Machines S/N 0200215384 to Present & China Built Machines S/N B200011011 to Present Only)	
			— — — — — — — — — —	
	2902267	1	Decal Kit 1 (Includes Items 9-19 & 44)	8
		1	Decal Kit 2 Options (Includes Items 21-27 & 40-41):	
	Use 2902526		Brazilian Spec (was p/n 2902302)	2
	Use 2902528		Chinese Spec (was p/n 2902335)	2
	Use 2902524		CSA Spec (was p/n 2902278)	2
	Use 2902532		Korean Spec (was p/n 2902378)	2
	Use 2902525		Latin American Spec (was p/n 2902301)	2

FIGURE 8-2. DECALS INSTALLATIONS (ANSI EXPORT SPEC) (CONTINUED)

ITEM #	PART NUMBER	QTY.	DESCRIPTION	REV.
	0010588	Ref.	**DECAL OPTIONS**	83
101 to 129	Not Used			
130		A/R	Decal - Capacity Options:	
			1930ES:	
	1705638	2	500lbs/227kg (Platform Box & Platform Entry Locations)	
	1705699	1	500lbs/227kg (Ground Control Box Location)	
	1705639	3	2030ES: 800lbs/363kg (All Locations)	
			2630ES:	
	1705941	1	Platform Console Box Decal - 500lb/227kg & 800lb/360kg	
	1705880	1	Platform Entry Decal - 500lb/227kg & 800lb/360kg	
	1705941	1	Ground Control Box - 500lb/227kg & 800lb/360kg	
	1705640	3	2646ES: 1000lbs/454kg	
	1705641	3	3246ES: 700lbs/317kg	
131		1	Decal - No Pipe Racks/Panel Carriers Options:	
			1930ES	
	1001092071		ANSI Export/UL Specs	
	1001120623		Brazilian & Latin American Specs (was p/n 1001092071)	
	1001092580		CSA Spec	
	1001120622		Chinese Spec (was p/n 1001092071)	
	1001120621		Korean Spec (was p/n 1001092071)	
	1001120629		Latin American Spec (was p/n 1001092071)	
	Not Required		2030ES/2630ES/2646ES/3246ES	
132 to 141	Not Used			
142	1001116915	1	Decal - Hardware Retention (was p/n 1001116928)	
143		2	Decal - Model Designation Options:	
	1001099919		1930ES	
	1001099920		2030ES	
	1001099921		2630ES	
	1001099922		2646ES	
	1001099923		3246ES	
144		4	Decal - Max Tire Load Options:	
	1705647		1930ES	
	1706310		2030ES/2630ES	
	1706311		2646ES/3246ES	
145 to 170	Not Used			
171	Not Available		Nameplate - Serial Number	
172		A/R	Decal - CSA Options:	
	1705303	1	CSA Spec (English/French)	
	Not Required	0	Latin American Spec (English/Spanish)/(English/Chinese Spec)	
173	Not Used			
174	3251813	1	Decal - Made in USA	
175	Not Used			
176	1705880	1	Decal - Capacity (Platform Entry) (800lbs/363kg - 500lbs/227kg) (2630ES)	

FIGURE 8-3. DECAL INSTALLATION (AUSTRALIAN, CE & JAPANESE SPECS)

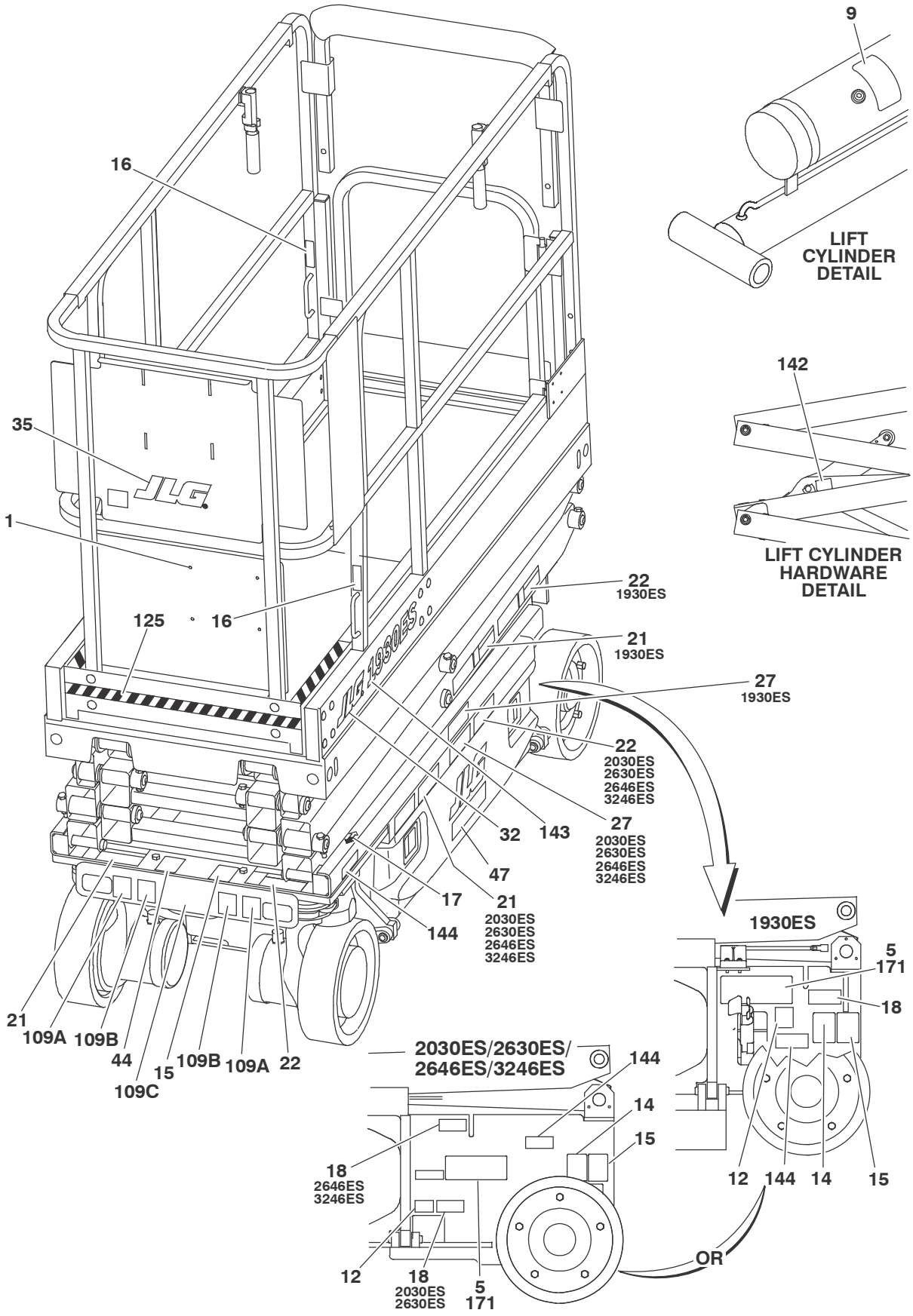

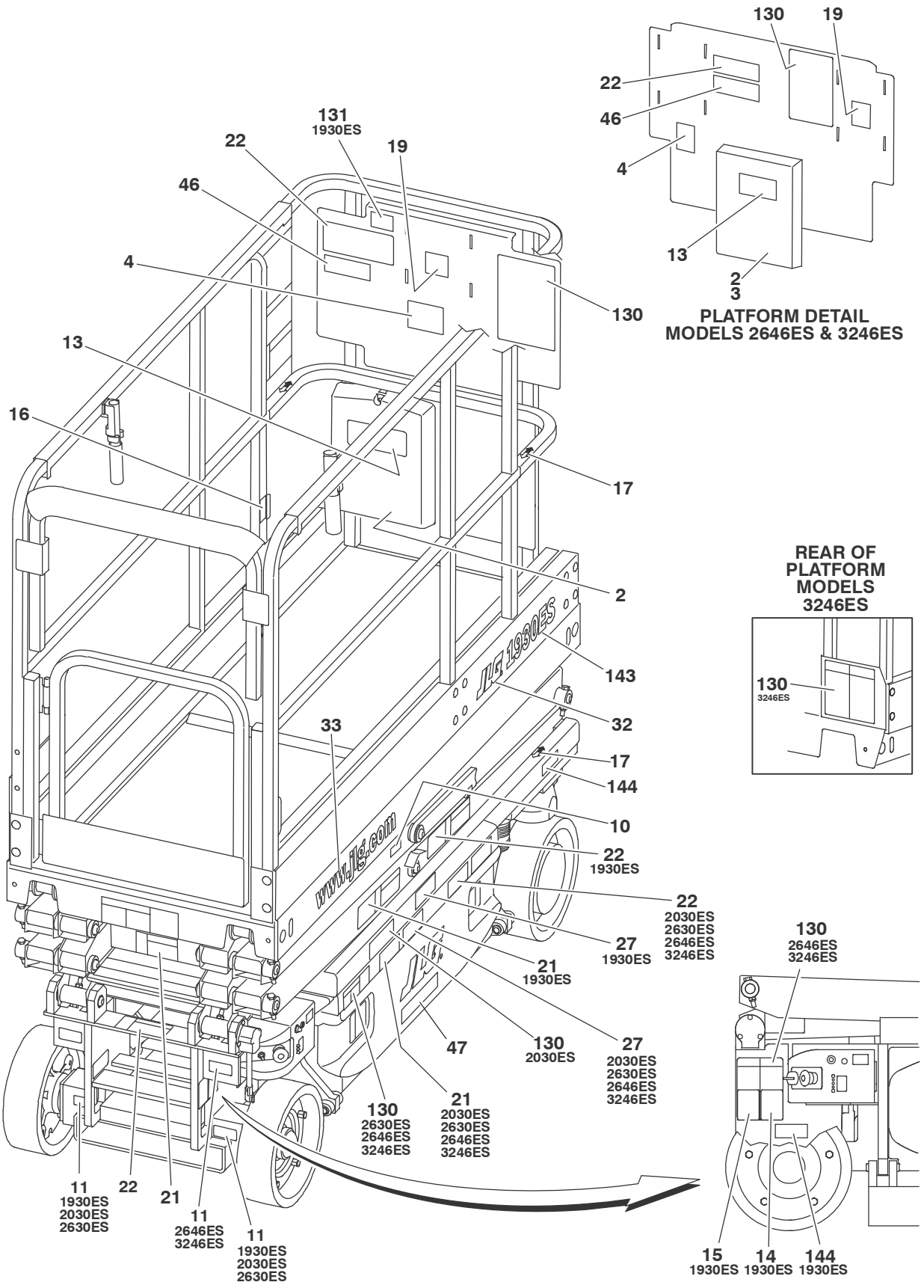
130
19
22
46
4
13
2
3
PLATFORM DETAIL
MODELS 2646ES & 3246ES
131
1930ES
22
19
46
4
130
13
16
17
2
143
32
33
17
144
10
22
1930ES
22
2030ES
2630ES
2646ES
3246ES
27
1930ES
21
1930ES
47
130
2030ES
27
2030ES
2630ES
2646ES
3246ES
130
2630ES
2646ES
3246ES
21
2030ES
2630ES
2646ES
3246ES
11
1930ES
2030ES
2630ES
22
21
11
2646ES
3246ES
11
1930ES
2030ES
2630ES
REAR OF
PLATFORM
MODELS
3246ES
130
3246ES
130
2646ES
3246ES
15
1930ES
14
1930ES
144
1930ES

FIGURE 8-3. DECAL INSTALLATION (AUSTRALIAN, CE & JAPANESE SPECS)

ITEM #	PART NUMBER	QTY.	DESCRIPTION	REV.
		Ref.	**DECALS INSTALLATION - ANSI EXPORT SPECS**	
	0275222	Ref.	**Australian Spec**	B
	0275221	Ref.	**CE & Japanese Specs**	B
	0272870	Ref.	**JLG Decals**	2
1	2080040	4	Fastener	
2	0860520	1	Box, Manual Storage	
3	Not Used			
4	1700584	1	Decal - Patent (USA Built Machines S/N 0200198014 to S/N 0200205405 & China Built Machines S/N B200000100 to S/N B200003185)	
5	2080057	4	Fastener	
6 to 8	Not Used	1		
9	1704412	1	Decal - Hydraulic Oil	
10	1705693	1	Decal - Safety Prop	
11	1704016	2	Decal - Forklift	
12	1702155	1	Decal - Battery Disconnect	
13	1701509	1	Decal - Manual Reference	
14	1703811	3	Decal - Lifting Lugs	
15	1703814	3	Decal - Tie Down	
16	1704277	3	Decal - Attach Lanyard Here	
17	1703819	4	Decal - Directional Arrow	
18	1703822	1	Decal - Manual Descent	
19	1705692	1	Decal - Control Box Location	
20	Not Used			
21	1705673	4	Decal - Crushing Hazard	
22	1705671	5	Decal - Danger Electrocution	
23 to 26	Not Used			
27	1705670	1	Decal - Warning Battery Vent	
28 to 31	Not Used			
32	1705781	2	Decal - JLG	
33 to 34	Not Used			
35	1702773	1	Decal - JLG	
36 to 38	Not Used			
39		1	Decal - AC Power Options:	
	1703464		120-60Hz	
	3252507		220V-50/60Hz	
40 to 43	Not Used			
44	1701499	1	Decal - No Lift	
45	Not Used			
46	1001094359	1	Decal - Troubleshooting	
47		2	Decal - Battery Service Options (USA Built Machines S/N 0200215384 to Present & China Built Machines S/N B200011011 to Present Only)	
	1001146794		Australian & Japanese Specs	
	1001146795		CE Specs	
			— — — — — — — — — —	
	2902267	1	Decal Kit 1 (Includes Items 9-19 & 44)	8
	2902523	1	Decal Kit 2 (Includes Items 21, 22 & 27)	1
	2890186	1	Decal Kit CE (Includes qty1 of p/n 1702928 CE Decal)	1

FIGURE 8-3. DECAL INSTALLATION (AUSTRALIAN, CE & JAPANESE SPECS) (CONTINUED)

ITEM #	PART NUMBER	QTY.	DESCRIPTION	REV.
	0010588	Ref.	**DECAL OPTIONS**	83
101 to 108	Not Used			
109		A/R	Lifting Lug & Decals (Standard on Australian & Japanese Specs/ Optional on CE Specs)	
	0273454		1930ES (All Specs except Australian Spec)	A
	1001135753		1930ES (Australian Specs)	B
	0273454		2030ES/2630ES/2646ES/3246ES	A
109A	1703811	2	Decal - Lifting Lug	
109B	1703814	2	Decal - Tie-Down	
109C	0240055	1	Attach, Lifting Lug	
	3574636	1	Bar, Mounting (Located Behind Item 109C)	
110 to 124	Not Used			
125		A/R	Decal - Corner Stripe Options:	
	0272721		1930ES/2030ES/2630ES	B
	0272862		2646ES/3246ES	B
	4420051	1.3m	1930ES/2030ES/2630ES	
	4420051	1.2m	2646ES/3246ES	
126 to 129	Not Used			
130		1	Decal - Capacity Options:	
	1705666		230kg Indoor/120kg Outdoor (1930ES)	
	1705667		360kg (2030ES)	
	1705887		230kg (2630ES) (Australian Specs - USA Built Machines S/N 0200198014 to S/N 0200211631 & China Built Machines S/N B200000100 to S/N B200007193)	
	1705942		230kg/360kg (2630ES) (Australian Specs - USA Built Machines S/N 0200211631 to Present & China Built Machines S/N B200007193 to Present)	
	1705942		230kg/360kg (2630ES) (CE Specs)	
	1705668		450kg (2646ES)	
	1705819		320kg/450kg (3246ES) (Australian Specs - USA Built Machines S/N 0200198014 to S/N 0200211631 & China Built Machines S/N B200000100 to S/N B200007193)	
	1705704		320kg (3246ES) (Australian Specs - USA Built Machines S/N 0200211631 to Present & China Built Machines S/N B200007193 to Present)	
	1705704		320kg (3246ES) (CE Spec)	
131		1	Decal - No Pipe Racks/Panel Carriers Options:	
	Use 1001092497		1930ES (was p/n 1001092071 for Australian Spec)	
	Not Required		2030ES/2630ES/2646ES/3246ES	
132 to 141	Not Used			
142	1001116915	1	Decal - Hardware Retention (was p/n 1001116928)	
143		2	Decal - Model Designation Options:	
	1001099919		1930ES	
	1001099920		2030ES	
	1001099921		2630ES	
	1001099922		2646ES	
	1001099923		3246ES	

FIGURE 8-3. DECAL INSTALLATION (AUSTRALIAN, CE & JAPANESE SPECS) (CONTINUED)

ITEM #	PART NUMBER	QTY.	DESCRIPTION	REV.
144		4	Decal - Max Tire Load Options:	
	1705648		1930ES	
	1706310		2030ES/2630ES	
	1706312		2646ES/3246ES	
145 to 170	Not Used			
171	Not Available		Nameplate - Serial Number	

MODEL ES

The following list will service one machine (built to current production per date on the front cover) with emergency repair parts which can be installed in the field. Parts from the list should be replaced when inventory is depleted to keep service parts stock supplied. For further information, contact your JLG dealer or the JLG Industries Parts Department.

Part Number	Description	Qty./Machine
	STANDARD PARTS	Ref.
4360069	Breaker, Circuit - 10 Amp (Figure 2-2)	1
4360328	Switch, Toggle (Figure 2-2)	1
2860030	Key, Replacement (Figure 2-2)	1
4360475	Switch, Mushroom (Figures 2-2 & 4-6)	1
4360387	Switch, Push Button (Figure 2-3)	1
1001092354	Switch, Rotary Angle Sensor (Figures 3-1, 3-2, 3-3 & 3-4)	1
1001134438	Controller, Drive (Figure 4-6)	1
4360538	Switch & Membrane (Figure 4-6)	1
4360539	Switch, Toggle (Figure 4-6)	1
7027367	Switch, Push Button (Figure 4-7)	1
70000798	Coil (Figure 5-1)	1
70000799	Coil (Figure 5-1)	1
7023593	Plug, Fill (Figure 5-1)	1
7023576	Filter (Figure 5-1)	1
1001097347	Relay (Figures 7-2, 7-2 & 7-4)	1
	VARIABLE PARTS	Ref.
1001092456	Drive Module (Frame) (Figure 1-3)	1
3740146	Relay (UL Spec) (Figure 1-3)	1
3740150	Relay (Non-UL Spec) (Figure 1-3)	1
1001114933	Tilt Module (Figure 2-2)	1
4360469	Switch, Key (ANSI/ANSI Export/Australian Spec) (Figure 2-2)	1
4360470	Switch, Key (CE Spec) (Figure 2-2)	1
3080007	Magnet, Latch (Machines with Platform Gate Entry) (Figures 4-2, 4-3, 4-4 & 4-5)	1
1001101076	Snap Latch Repair Kit (Machines with Platform Chain Entry) (Figures 4-2, 4-4 & 4-5)	1
1001091965	Control Module (Platform) (Figure 4-6)	1
1001109088	Switch, Limit (All Specs except UL Spec) (Figure 1-4)	1
1001126905	Switch, Limit (UL Spec) (Figure 1-4)	1
2400093	Breaker, Circuit (CE Spec Machines with Platform Electrical Outlet) (Figures 7-2, 7-3 & 7-4)	1
4360613	Limit Switch (Machines with Optional Brake Disconnect) (Figures 7-2, 7-3 & 7-4)	1
4360336	Switch, Toggle (ANSI & CSA Spec Machines with Optional Battery Charger/ Inverter Combo) (Figures 7-2, 7-3 & 7-4)	1
3990010	Diode 6 Amp (ANSI & CSA Spec Machines with Optional Battery Charger/ Inverter Combo) (Figures 7-2, 7-3 & 7-4)	2

SECTION 9 RECOMMENDED SERVICE PARTS STOCK

MODEL ES

The following list will service one machine (built to current production per date on the front cover) with emergency repair parts which can be installed in the field. Parts from the list should be replaced when inventory is depleted to keep service parts stock supplied. For further information, contact your JLG dealer or the JLG Industries Parts Department.

Part Number	Description	Qty./Machine
	MAINTENANCE KITS	Ref.
1001101329	Annual Hydraulic Maintenance Kit - 1930ES/2030ES/2630ES (w/Standard Hydraulic Oil) (Figure 10-1)	1
1001101330	Annual Hydraulic Maintenance Kit - 2646ES/3246ES (w/Standard Hydraulic Oil) (Figure 10-1)	1

Note: This list is to accommodate machines ordered with special equipment. Options may not be applicable to all models. For more specific parts information contact JLG Parts Department.

FIG&ITEM#	PART NUMBER	QTY.	DESCRIPTION	REV.
10—1		Ref.	**SPECIAL OPTIONS LIST**	
		Ref.	**Airline Installation (1/2")**	
	0274516	Ref.	**1930ES**	
	0274370	Ref.	**2030ES**	
	0274517	Ref.	**2630ES**	
	0274446	Ref.	**2646ES/3246ES**	
		Ref.	**Brake Disconnect/Release Kit Options**	
	0275432	Ref.	**Brake Disconnect Cable Kit (Optional All Specs)**	
	2902331	Ref.	Brake Mount Kit (includes Mounting Bracket & Setscrew)	
	4922944	Ref.	Brake Switch & Harness	
	0275530	Ref.	**Brake Release Switch (Optional ANSI, ANSI Export, CSA & UL Specs/Standard on Australian & CE Specs) For Machines without Pressure Checks)**	
	See Note	Ref.	**Brake Release Switch (Optional ANSI, ANSI Export, CSA & UL Specs/Standard on Japanese Specs) (For Machines with Pressure Checks) (Was p/n 0275603) Note: Use Both p/ns 0275530& 0273859.**	
	2915016	Ref.	**Battery Charger Mounting Kit**	
	0256789	Ref.	**Camera Mount Assembly**	
		Ref.	**Decal Options:**	
	1001110179	Ref.	**Decals - Boels (1930ES CE Spec - Dutch Belgium)**	
	1001106715	Ref.	**Decals - Boels (1930ES CE Spec - Dutch Netherlands)**	
	1001109207	Ref.	**Decals - Boels (1930ES CE Spec - French)**	
	1001110176	Ref.	**Decals - Boels (1930ES CE Spec - German Austria)**	
	1001109146	Ref.	**Decals - Boels (1930ES CE Spec - German Deutchland)**	
	1001109210	Ref.	**Decals - Boels (1930ES CE Spec - TJECH)**	
	1001110180	Ref.	**Decals - Boels (2030ES CE Spec - Dutch Belgium)**	
	1001106716	Ref.	**Decals - Boels (2030ES CE Spec - Dutch Netherlands)**	
	1001109208	Ref.	**Decals - Boels (2030ES CE Spec - French)**	
	1001110177	Ref.	**Decals - Boels (2030ES CE Spec - German Austria)**	
	1001109147	Ref.	**Decals - Boels (2030ES CE Spec - German Deutchland)**	
	1001109211	Ref.	**Decals - Boels (2030ES CE Spec - TJECH)**	
	1001110181	Ref.	**Decals - Boels (2646ES/3246ES CE Spec - Dutch Belgium)**	
	1001106717	Ref.	**Decals - Boels (2646ES/3246ES CE Spec - Dutch Netherlands)**	
	1001109209	Ref.	**Decals - Boels (2646ES/3246ES CE Spec - French)**	
	1001110178	Ref.	**Decals - Boels (2646ES/3246ES CE Spec - German Austria)**	
	1001109148	Ref.	**Decals - Boels (2646ES/3246ES CE Spec - German Deutchland)**	
	1001109212	Ref.	**Decals - Boels (2646ES/3246ES CE Spec - TJECH)**	
	2890186	Ref.	**Decals - CE Kit**	
	0272721	Ref.	**Decals - Corner Stripes (1930ES/2030ES/2630ES)**	
	0272862	Ref.	**Decals - Corner Stripes (2646ES/3246ES)**	

Note: This list is to accommodate machines ordered with special equipment. Options may not be applicable to all models. For more specific parts information contact JLG Parts Department.

FIG&ITEM#	PART NUMBER	QTY.	DESCRIPTION	REV.
	Continued	Ref.	**Decal Options:**	
	0273603	Ref.	**Decals - Commercial Solutions Group (ANSI & CSA Specs Only)**	
	1705304	Ref.	**Decals - Service Support (Commercial Solutions Group Only) (ANSI, CSA & UL Specs Only)**	
	0274545	Ref.	**Decals - FedEx (ANSI, CE, CSA & UL Specs Only)**	
	0273603	Ref.	**Decals - Grainger Spec (ANSI, CSA & UL Specs Only)**	
	0274527	Ref.	**Decals - Head & Engquist Equipment (ANSI Specs Only)**	
	0273543	Ref.	**Decals - Hertz (All Models - USA Built S/N 0200198014 to S/N 0200202469, Belgium Built Machines S/N 1200008481 to S/N1200024983 & China Built Machines S/N B200000100 to S/N B200001839)(ANSI, CSA & UL Specs Only)**	
	1001128998	Ref.	**Decals - Hertz (1930ES - USA Built S/N 0200202469 to Present & China Built Machines S/N B200001839 to Present) (ANSI, CSA & UL Specs Only)**	
	1001128999	Ref.	**Decals - Hertz (2030ES/2630ES - USA Built S/N 0200202469 to Present & China Built Machines S/N B200001839 to Present) (ANSI, CSA & UL Specs Only)**	
	1001129000	Ref.	**Decals - Hertz (2646ES/3246ES - USA Built S/N 0200202469 to Present & China Built Machines S/N B200001839 to Present) (ANSI, CSA & UL Specs Only)**	
	0272877	Ref.	**Decals - Home Depot (ANSI, CSA & UL Specs Only)**	
	0273544	Ref.	**Decals - Nations Rent (ANSI, CSA & UL Specs Only)**	
	0274242	Ref.	**Decals - Nations Equipment Services (1930ES/2030ES/ 2630ES) (ANSI, CSA & UL Specs Only)**	
	0274251	Ref.	**Decals - Nations Equipment Services (2646ES/3246ES) (ANSI, CSA & UL Specs Only)**	
	0275900	Ref.	**Decals - RSC Equipment Rental (ANSI & CSA Specs Only)**	
	1705304	Ref.	**Decals - Service Support (ANSI & CSA Specs Only)**	
	1706922	Ref.	**Decals - Service Support (ANSI & CSA Specs Only)**	
	0272872	Ref.	**Decals - Sunbelt (ANSI, CSA & UL Specs Only)**	
	0274179		**Decals - Sunstate (ANSI, CSA & UL Specs Only)**	
	1001151156	Ref.	**Decals - Titan Rentals (ANSI & CSA Specs Only)**	
	0274126	Ref.	**Decals - UL Specs (EE Rating) (USA Built Machines)**	
	1001126013	Ref.	**Decals - UL Specs (EE Rating) (China Built Machines)**	
	0272871	Ref.	**Decals - United Rentals (ANSI, CSA & UL Specs Only)**	
	1001103307	Ref.	**Decals - UPS (ANSI Spec Only)**	
	1001141655	Ref.	**Decals - Volvo Rents (1930ES) (ANSI & CSA Specs Only)**	
	1001141656	Ref.	**Decals - Volvo Rents (2030ES/2630ES) (ANSI & CSA Specs Only)**	
	1001141657	Ref.	**Decals - Volvo Rents (2646ES/3246ES) (ANSI & CSA Specs Only)**	
		Ref.	**Electrical Connector Kits**	
	1001148902	Ref.	Amp/Tyco Electrical Connector Kit	
	1001148903	Ref.	Deutsch DT Electrical Connector Kit	
	1001148904	Ref.	Deutsch HD Electrical Connector Kit	
	1001148905	Ref.	Packard Electrical Connector Kit	
	1001148906	Ref.	Various Electrical Connectors Kit	

Note: This list is to accommodate machines ordered with special equipment. Options may not be applicable to all models. For more specific parts information contact JLG Parts Department.

FIG&ITEM#	PART NUMBER	QTY.	DESCRIPTION	REV.
		Ref.	**Electricians Package (Work Station in the Sky Accessory)**	
		Ref.	**Note: For Breakdown of this Accessory Refer to Accessories Manual p/n 3128160.**	
	0273950	Ref.	**Without DC Converter**	
	0273955	Ref.	**With DC Converter**	
		Ref.	**Electricians Tree (Work Station in the Sky Accessory)**	
		Ref.	**Note: For Breakdown of this Accessory Refer to Accessories Manual p/n 3128160.**	
	1001102549	Ref.	**Without DC Converter**	
	0274153	Ref.	**With DC Converter**	
	0274849	Ref.	**Fire Extinguisher Installation (ANSI)**	
		Ref.	**Fluids**	
	2300028	A/R	**Fluid, Hydraulic - Mobil DTE 10 Excel 15 (Bulk)**	
	70010346	A/R	**Fluid, Hydraulic - Mobil DTE 10 Excel 15 (1 Gallon)**	
	2300042	A/R	**Fluid, Hydraulic - Synthetic Biodegradeable**	
		Ref.	**Footswitch Installation Options (Japanese Spec)**	
	0273761	Ref.	**1930ES**	
	0273762	Ref.	**2030ES/2630ES/2646ES/3246ES**	
	3128145	Ref.	**Inspection Packet (ANSI & ANSI Export Specs Only)**	
	0274341	Ref.	**Interlock Override for Battery Charger Installation (ANSI)**	
		Ref.	**Inverter Installations (ANSI, ANSI Export & Japanese Specs)**	
	0272876	Ref.	**1930ES**	
	0273070	Ref.	**2030ES/2630ES**	
	0273071	Ref.	**2646ES/3246ES**	
	2460042	1	Inverter Assembly	
	4360482	1	Switch, Toggle	
	1705051	1	Decal - Instructions	
	1705052	1	Decal - On-Off	
		Ref.	**Lifting Lugs Installations**	
	0273454	Ref.	**1930ES (All Specs except Australian Spec)**	
	1001135753	Ref.	**1930ES Australian Spec**	
	0273454	Ref.	**2030ES/2630ES/2646ES/3246ES**	
		Ref.	**Maintenance Kits - Annual Hydraulic (Not for Machines with Biodegradeable Hydraulic Fluid)**	
	1001101329	Ref.	**1930ES/2030ES/2630ES**	
	1001101330	Ref.	**2646ES/3246ES**	
	2902405	Ref.	**Motor Band Kit (UL Specs Only)**	
	3125053	Ref.	**Operator Video (ANSI & ANSI Export Specs Only)**	

Note: This list is to accommodate machines ordered with special equipment. Options may not be applicable to all models. For more specific parts information contact JLG Parts Department.

FIG&ITEM#	PART NUMBER	QTY.	DESCRIPTION	REV.
		Ref.	**Panel Carrier Installations (All Specs Except U/L Spec)**	
		Ref.	**Note: For Breakdown of this Accessory Refer to Accessories Manual p/n 3128160.**	
		Ref.	**1930ES:**	
	No Longer Available	Ref.	**ANSI, ANSI Export & CSA Specs (was p/n 0274970)**	
	No Longer Available	Ref.	**Australian, CE & Japanese Specs (was p/n 0274969)**	
		Ref.	**2030ES & 2630ES:**	
	0275006	Ref.	**ANSI, ANSI Export & CSA Specs**	
	0275007	Ref.	**Australian, CE & Japanese Specs**	
		Ref.	**2646ES & 3246ES:**	
	0274980	Ref.	**ANSI, ANSI Export & CSA Specs (2 in Wide Channel)**	
	1001121695	Ref.	**ANSI, ANSI Export & CSA Specs (7in Wide Channel) (2646ES Only)**	
	0274981	Ref.	**Australian, CE & Japanese Specs**	
	1001092074	Ref.	**Pipe Racks Installations (Not Available on 1930ES)**	
			Note: For Breakdown of this Accessory Refer to Accessories Manual p/n 3128160.	
	1001092073	2	Pipe Racks Assembly	
		Ref.	**Platform Latch - Magna-Latch Side Pull**	
	1001135316	Ref.	**1930ES/2030ES/2630ES (All Specs Except Australian Spec)**	
	1001135317	Ref.	**2646ES/3246ES (All Specs Except Australian Spec)**	
	1001140336	Ref.	**All Machines (Australian Specs)**	
		Ref.	**Platform Limit Switches & Rail Padding Installations**	
	0275078	Ref.	**1930ES without Limit Switches (All Specs)**	
		Ref.	**1930ES with Limit Switches Options:**	
	0275080	Ref.	**Non-UL Spec (ANSI & ANSI Export Specs Only)**	
	1001100029	Ref.	**UL Spec (ANSI & UL Specs Only)**	
	0275077	Ref.	**2030ES/2630ES without Limit Switches (All Specs)**	
		Ref.	**2030ES/2630ES with Limit Switches Options:**	
	0275081	Ref.	**Non-UL (ANSI & ANSI Export Specs Only)**	
	1001092701	Ref.	**UL Spec (ANSI & UL Specs Only)**	
	0275076	Ref.	**2646ES/3246ES without Limit Switches**	
		Ref.	**2646ES/3246ES with Limit Switches**	
	0275082	Ref.	**Non-UL Spec (ANSI & ANSI Export Specs Only)**	
	1001092702	Ref.	**UL Spec (ANSI & UL Specs)**	
	1001098162	Ref.	**2646ES with Limit Switches without Padding (CE Spec Only)**	
	1001121295	Ref.	**2646ES with Limit Switches with Padding (ANSI Export Spec Only)**	

Note: This list is to accommodate machines ordered with special equipment. Options may not be applicable to all models. For more specific parts information contact JLG Parts Department.

FIG&ITEM#	PART NUMBER	QTY.	DESCRIPTION	REV.
		Ref.	**Platform Worklights Installations**	
	0272850	Ref.	**1930ES (Without UL Specs)**	
	0272851	Ref.	**2030ES (Without UL Specs)**	
	0272852	Ref.	**2630ES (Without UL Specs)**	
	0272853	Ref.	**2646ES/3246ES (Without UL Specs)**	
	0275937	Ref.	**2646ES/3246ES (With UL Specs)**	
	0273951	Ref.	**Plant Maintenance Package (Work Station in the Sky Accessory)**	
		Ref.	**Note: For Breakdown of this Accessory Refer to Accessories Manual p/n 3128160.**	
	0273951	Ref.	**Plumbers Package (Work Station in the Sky Accessory)**	
		Ref.	**Note: For Breakdown of this Accessory Refer to Accessories Manual p/n 3128160.**	
	0273859	Ref.	**Pressure Check Installation (All Specs Except Australian & CE Specs)**	
		Ref.	**Tools for Service**	
	7002821	1	Crimper, Wire	
	7002823	1	Extractor, Pin - Universal	
	4460467	A/R	Extractor, Pin #16 Gauge	
	4460510	A/R	Extractor, Pin #12 Gauge	
	7004275	1	Installer, Cylinder Seal - 1"	
	7004276	1	Installer, Cylinder Seal - 1 1/2"	
	7002826	1	Installer, Cylinder Seal - 2"	
	7016654	1	Screwdriver, Magnetic	
	7002822	1	Screwdriver, Potentiometer	
	7002828	1	Stripper, Wire	
	2901443	1	Analyzer Kit	
	4341055	1	Service Safety Prop	
	1706331	1	Decal - ES Service Prop	
	70000555	1	Relief Valve Removable Tool (For Older Style Relief Valves)	
	2915230	1	Battery Charger Reprogram Controller Kit	
	1001137005	1	Software Cables Kit	
	0240093	Ref.	**Vise Installation (Work Station in the Sky Accessory)**	
		Ref.	**Note: For Breakdown of this Accessory Refer to Accessories Manual p/n 3128160.**	

Note: This list is to accommodate machines ordered with special equipment. Options may not be applicable to all models. For more specific parts information contact JLG Parts Department.

FIG&ITEM#	PART NUMBER	QTY.	DESCRIPTION	REV.
		Ref.	**Welder Installations (All Specs Except U/L Spec)**	
		Ref.	**Note: For Breakdown of this Accessory Refer to Accessories Manual p/n 3128160.**	
	0272879	Ref.	**1930ES Complete Kit**	
	0275072	Ref.	**1930ES Kit (Includes Fire Extinguisher & Power Cable Only)**	
	0272880	Ref.	**2030ES Complete Kit**	
	0275073	Ref.	**2030ES Kit (Includes Fire Extinguisher & Power Cable Only)**	
	0272881	Ref.	**2630ES Complete Kit**	
	0275074	Ref.	**2630ES Kit (Includes Fire Extinguisher & Power Cable Only)**	
	0272882	Ref.	**2646ES/3246ES Complete Kit**	
	0275075	Ref.	**2646ES/3246ES Kit (Includes Fire Extinguisher & Power Cable Only)**	
		Ref.	**Work Station in the Sky Accessories Installations**	
		Ref.	**Note: For Breakdown of this Accessory Refer to Accessories Manual p/n 3128160.**	
	0273965	Ref.	**Work Station without DC Converter Installation**	
	0240087	Ref.	**Work Station without DC Converter Assembly**	
	0273955	Ref.	**Work Station with DC Converter Installation (1930ES/ 2030ES)**	
	0273955	Ref.	**Work Station with DC Converter Installation (2630ES/ 2646ES/3246ES)**	
	0240071	Ref.	**Work Station with DC Converter Assembly**	

Part Number	Page
0010588	1-4, 8-6, 8-13, 8-17
0060090	1-17, 1-19
0060091	1-17
0060093	1-19
0100011	1-3, 1-25, 2-11
0100048	2-11, 7-10, 7-22, 7-34
0100051	2-3
0100083	1-13
01001096627	7-17, 7-29
0140011	4-23
0140043	1-14, 7-15, 7-27, 7-38
0200783	3-16
0200789	3-16
0200799	3-7, 3-12
0200800	3-12
0200801	3-12
0200802	3-7, 3-12
0200803	3-7, 3-12
0200804	3-7, 3-12
0200805	3-12
0200807	3-7, 3-12
0200810	3-3
0200815	3-3
0200816	3-7
0200820	3-17
0200821	3-3
0200822	3-3
0200823	3-3
0200824	3-3
0200825	3-3
0200826	3-16
0200827	3-16
0200828	3-16
0200829	3-16
0200830	3-16
0200831	3-16
0200832	3-16
0200834	3-7, 3-12
0200838	3-3
0200839	3-7
0200840	3-12
0200841	3-16
0200842	3-16
0240055	8-17
0240071	10-6
0240087	10-6
0240093	10-5
0256789	10-1
0272309	1-27
0272371	1-3, 6-3
0272721	8-17, 10-1
0272722	1-14
0272810	1-14
0272811	1-14
0272839	7-15, 7-27, 7-39
0272843	7-15, 7-27, 7-39
0272850	10-5
0272851	10-5
0272852	10-5
0272853	10-5
0272862	8-17, 10-1
0272870	8-5, 8-11, 8-16
0272871	10-2
0272872	10-2
0272874	1-21
0272875	1-21
0272876	10-3
0272877	10-2
0272878	2-8, 4-24
0272879	10-6
0272880	10-6
0272881	10-6
0272882	10-6
0272887	1-27
0272888	1-27
0272913	1-14
0272980	1-27
0273070	10-3
0273071	10-3
0273227	1-3, 6-3
0273443	1-14
0273454	8-17, 10-3
0273543	10-2
0273544	10-2
0273603	10-2
0273698	2-3, 2-4
0273761	10-3
0273762	10-3
0273841	4-24
0273859	10-5
0273950	10-3
0273951	10-5
0273955	10-3, 10-6
0273965	10-6
0273966	1-14
0274012	1-27
0274126	10-2
0274153	10-3
0274179	10-2
0274242	10-2
0274251	10-2
0274341	10-3
0274370	10-1
0274386	4-24
0274446	10-1
0274516	10-1
0274517	10-1
0274527	10-2
0274545	10-2
0274546	1-3, 6-3
0274816	4-7
0274817	4-3
0274818	4-3, 4-4
0274841	3-3
0274849	10-3
0274874	3-3, 5-7
0274878	3-16
0274879	3-17, 5-7
0274880	3-16
0274881	3-17, 5-7
0274929	4-3, 4-4
0274930	4-3
0274931	4-3
0274932	4-19
0274933	4-19
0274943	4-15
0274944	4-15
0274969	10-4
0274970	10-4
0274971	4-3, 4-4
0274980	10-4
0274981	10-4
0274985	4-7
0274991	4-3
0274992	4-3
0275006	10-4
0275007	10-4
0275016	3-7, 5-7
0275017	3-13, 5-7
0275018	3-7
0275019	3-12
0275020	2-3
0275021	2-3
0275022	2-3
0275029	4-3
0275042	2-3
0275043	2-3
0275044	2-3
0275072	10-6
0275073	10-6
0275074	10-6
0275075	10-6
0275076	10-4
0275077	10-4
0275078	10-4
0275079	1-21
0275080	10-4
0275081	10-4
0275082	10-4
0275088	1-21
0275103	1-25
0275104	1-25
0275105	1-25
0275120	1-27
0275212	1-27
0275216	7-18, 7-30, 7-41
0275217	7-18, 7-30, 7-42
0275218	7-18, 7-30, 7-42
0275219	7-18, 7-30, 7-42
0275220	8-5
0275221	8-16
0275222	8-16
0275223	8-11
0275224	8-11
0275225	8-11
0275226	8-11
0275227	8-11
0275401	2-3
0275429	4-11
0275432	10-1
0275452	7-18, 7-30, 7-42
0275453	7-18, 7-30, 7-42
0275454	7-18, 7-30, 7-42
0275472	7-15, 7-27, 7-39
0275480	2-3, 7-13
0275485	7-15, 7-27, 7-39
0275486	7-15, 7-27, 7-39
0275487	7-15, 7-27, 7-39
0275488	7-15, 7-27, 7-39
02754887	7-15
0275489	7-15, 7-27, 7-39
0275490	7-15, 7-27, 7-39
0275510	7-27
0275511	7-27
0275512	7-27
0275513	7-27
0275514	7-27
0275515	7-27
0275516	7-27
0275517	7-39
0275518	7-39
0275519	7-39
0275520	7-39
0275521	7-39
0275522	7-39
0275523	7-39
0275530	2-11, 10-1
0275603	10-1
0275663	1-22, 7-15, 7-26, 7-38
0275664	1-22, 7-15, 7-26, 7-38
0275665	1-22, 7-15, 7-26, 7-38
0275666	1-22, 7-14, 7-26, 7-38
0275667	1-22
0275692	3-3, 5-7
0275693	3-7, 5-7
0275694	3-13, 5-7
0275695	3-17, 5-7
0275696	3-17, 5-7
0275900	10-2
0275937	10-5
0276667	7-14, 7-26, 7-38
0380025	2-7
0400215	2-3
0400216	2-3
0440257	3-16
0440259	1-3, 5-9
0440263	1-17, 1-19
0440264	1-4, 3-3
0440265	1-4
0440266	3-3, 3-7, 3-12, 3-16

SECTION 11 PART NUMBER INDEX

Part Number	Page
0440267	3-7, 3-12, 3-16
0561520	4-3
0610161	2-7, 7-12, 7-24, 7-36
0630565	4-4, 4-7, 4-11, 4-15, 4-19
0630580	1-3
0700614	1-17, 1-19
0700615	1-27, 2-3, 2-8
0700616	2-3
0700617	1-27
0700619	1-13
0700624	1-13
0700814	7-36
0700819	1-13
0700823	4-7
0700825	4-11
0701015	1-19, 3-7, 3-12
0701016	1-3, 1-27, 3-16
0701017	3-12
0701020	1-3, 3-16
0701022	3-3, 3-7, 3-12, 3-13, 3-16, 3-17, 4-3
0701024	4-3
0701027	3-16, 4-3
0701029	3-12, 3-16, 4-3
0760410	1-27
0760606	7-12, 7-24, 7-36
0760610	2-3, 7-11, 7-23, 7-24, 7-35
0760614	7-11, 7-23, 7-35
0760615	7-11
0760619	7-17, 7-29, 7-41
0760808	4-24
0760812	1-25
0760814	1-25
0761014	3-3
0840041	7-11, 7-13, 7-23, 7-25, 7-35, 7-37
0840058	7-11, 7-12, 7-23, 7-24, 7-35, 7-36
0840059	7-11, 7-23, 7-35
0840060	7-13, 7-25, 7-36
0840061	7-10, 7-22, 7-34
0860520	8-5, 8-11, 8-16
0861678	2-3, 2-4
0861731	7-16, 7-27, 7-39
0861781	7-16, 7-27, 7-39
0861782	7-16, 7-28, 7-39
0902780	1-25
0902905	1-27
0902906	1-27
0903086	1-27
0903319	1-25
0903339	7-11
0903444	1-25
0903484	7-17, 7-29, 7-41
0903566	7-17, 7-29, 7-41
0903569	7-17, 7-29, 7-41
0903574	4-4
0962006	5-6
0962181	5-6
0962257	5-6
0962292	1-19
1001091102	7-17, 7-29, 7-41
1001091153	4-23
1001091154	4-23
1001091272	4-23
1001091275	4-23
1001091277	4-23
1001091278	4-23
1001091279	4-23
1001091280	4-23
1001091393	4-24
1001091396	4-23
1001091492	1-13
1001091502	1-9, 7-13
1001091843	1-9, 7-25, 7-37
1001091965	4-24, 9-1
1001091968	4-24
1001092071	8-6, 8-13, 8-17
1001092073	10-4
1001092074	10-4
1001092354	3-4, 3-8, 3-13, 3-17, 7-14, 7-26, 7-38, 9-1
1001092454	2-11
1001092456	1-13, 9-1
1001092497	8-17
1001092580	8-13
1001092701	10-4
1001092702	10-4
1001092737	1-3, 1-8
1001092738	1-3, 1-8
1001092739	1-13
1001092740	1-13
1001092741	1-13
1001093556	2-11, 7-19, 7-31, 7-43
1001093693	7-35
1001093839	1-25
1001094105	7-19, 7-31, 7-43
1001094124	1-14
1001094154	7-10
1001094155	7-22
1001094156	7-22
1001094157	7-34
1001094175	7-12, 7-24, 7-35
1001094180	7-12, 7-24, 7-36
1001094203	2-11
1001094301	1-13
1001094332	7-10
1001094333	7-22
1001094334	7-22
1001094335	7-34
1001094359	8-5, 8-12, 8-16
1001096138	7-11, 7-23, 7-35
1001096627	7-41
1001096628	7-15, 7-27, 7-39
1001096705	7-12
1001096706	7-24
1001096707	7-36
1001096794	7-23
1001096795	7-25
1001096796	7-37
1001096799	7-23, 7-25
1001097150	7-18, 7-30, 7-41
1001097347	7-10, 7-23, 7-34, 9-1
1001098162	10-4
1001099628	1-9
1001099676	1-9
1001099919	8-6, 8-13, 8-17
1001099920	8-6, 8-13, 8-17
1001099921	8-6, 8-13, 8-17
1001099922	8-6, 8-13, 8-17
1001099923	8-6, 8-13, 8-17
1001100029	10-4
1001100343	7-16, 7-18, 7-28, 7-30, 7-40
1001100343CEE	7-39
1001100344	7-16, 7-18, 7-28, 7-30, 7-39, 7-40
1001100819	1-9
1001100820	1-9
1001100840	1-4
1001100894	1-4
1001101076	4-7, 4-15, 4-19, 9-1
1001101329	9-2, 10-3
1001101330	9-2, 10-3
1001102258	1-21
1001102349	1-4
1001102351	1-3
1001102353	1-4
1001102354	1-3
1001102489	1-21
1001102549	10-3
1001103257	1-21, 7-14, 7-26, 7-38
1001103258	1-21, 7-14, 7-26, 7-38
1001103307	10-2
1001105108	1-28
1001105109	1-28
1001106715	10-1
1001106716	10-1
1001106717	10-1
1001109088	1-17, 1-19, 9-1
1001109146	10-1
1001109147	10-1
1001109148	10-1
1001109207	10-1
1001109208	10-1
1001109209	10-1
1001109210	10-1
1001109211	10-1
1001109212	10-1
1001109232	1-17, 1-19
1001109233	1-17, 1-19
1001109475	7-17, 7-29, 7-41
1001109482	7-17, 7-29, 7-41
1001110176	10-1
1001110177	10-1
1001110178	10-1
1001110179	10-1
1001110180	10-1
1001110181	10-1
1001110826	2-4, 7-11
1001112111	1-21
1001112112	2-3
1001112113	2-3, 7-15, 7-27, 7-38
1001113574	1-21
1001113576	1-21
1001114466	1-4
1001114467	1-4
1001114882	1-3, 1-13
1001114883	7-22
1001114884	7-22
1001114885	1-14, 2-8
1001114886	1-14, 2-8
1001114920	7-22
1001114921	7-22
1001114924	1-14, 2-8
1001114925	1-14, 2-8
1001114929	2-7
1001114930	2-7
1001114931	2-7
1001114932	2-7
1001114933	2-7, 7-12, 7-24, 7-36, 9-1
1001114934	7-22
1001114935	2-8, 7-12, 7-24, 7-36
1001114937	2-7, 7-12, 7-24, 7-36
1001114992	7-13, 7-25, 7-37
1001115002	7-11, 7-23, 7-35
1001115022	7-23, 7-25
1001115076	7-11, 7-23, 7-35
1001115126	7-10, 7-22, 7-34
1001115170	1-13
1001115173	1-17
1001115471	7-25
1001115472	7-25
1001116630	7-10
1001116631	7-10
1001116632	7-34
1001116633	7-34
1001116634	7-10
1001116635	7-11, 7-13
1001116636	7-34
1001116637	7-35, 7-36
1001116915	8-6, 8-13, 8-17
1001116928	8-6, 8-13, 8-17

Part Number	Page
1001117032	1-3, 1-13
1001117033	1-3, 1-13
1001117265	1-17
1001117266	1-19
1001118215	4-24
1001118216	4-24
1001120621	8-13
1001120622	8-13
1001120623	8-13
1001120629	8-13
1001121295	10-4
1001121695	10-4
1001126013	10-2
1001126898	1-17
1001126900	1-17
1001126903	1-19
1001126905	.1-17, 1-19, 9-1
1001127269	2-3, 7-15, 7-27, 7-38
1001127523	7-13, 7-25
1001128998	10-2
1001128999	10-2
1001129000	10-2
1001131270	8-5, 8-11
1001132233	2-3
1001132439	.1-9, 7-25, 7-37
1001134012	.1-9, 7-25, 7-37
1001134438	.4-23, 4-27, 9-1
1001134933	4-3
1001134934	4-3, 4-4
1001134935	4-4
1001134951	4-3
1001135316	10-4
1001135317	10-4
1001135753	8-17, 10-3
1001136847	1-25
1001137005	...7-19, 7-31, 7-43, 10-5
1001140336	10-4
1001141655	10-2
1001141656	10-2
1001141657	10-2
1001141967	7-16, 7-28, 7-39
1001141968	...7-16, 7-17, 7-28, 7-40
1001141969	...7-16, 7-17, 7-28, 7-40
1001141970	...7-16, 7-18, 7-28, 7-30, 7-40, 7-42
1001141971	...7-16, 7-18, 7-28, 7-30, 7-40, 7-42
1001146794	.8-5, 8-12, 8-16
1001146795	8-16
1001148902	10-2
1001148903	10-2
1001148904	10-2
1001148905	10-2
1001148906	10-2
1001149795	8-6
1001149796	8-6
1001149797	8-6
1001149798	8-6
1001149799	8-6
1001151156	10-2
1060279	8-11
1060633	7-19, 7-31, 7-43
1060680	7-18, 7-30, 7-42
1060688	1-21, 1-22, 7-14, 7-26, 7-38
1060689	1-21
1060908	7-18, 7-30, 7-41
1060998	7-13, 7-25, 7-36
1061034	3-7, 3-13, 3-17, 5-7
1061036	3-4, 5-7
1180380	3-17
1180382	3-7, 3-12
1180383	3-12
1260136	4-7, 4-15, 4-19
1271617	4-7, 4-11
1271618	4-7, 4-11
1320043	1-25
1320136	1-21
1320162	1-13
1320318	7-10, 7-34
1321130	2-4
1321293	1-21
1321716	7-12, 7-24, 7-36
1380132	4-8, 4-11, 4-16, 4-20
1380153	1-3
1380156	4-23
1380158	7-10, 7-22, 7-34
1380159	4-24
1600244	7-19, 7-31, 7-43
1600402	4-23, 4-27
1600439	4-23
1600466	1-22
1671098	4-23
1671105	2-7
1671124	2-8
1671131	4-24
1671132	1-13
1671133	1-13
1671202	2-3
1671203	2-3
1671204	2-3
1671207	7-16, 7-28, 7-40
1684237	1-3, 5-9, 6-3
1684456	1-3, 5-9, 6-3
1684484	3-3, 5-4
1684487	3-7, 5-4
1684488	3-12, 5-4
1684489	3-16, 5-4
1684490	3-16, 5-4
1684526	3-3, 5-4
1684527	3-7, 5-4
1684528	3-12, 5-4
1684529	3-16, 5-4
1684530	3-16, 5-4
1700584	8-5, 8-11, 8-16
1701499	8-5, 8-12, 8-16
1701509	8-5, 8-11, 8-16
1702155	8-5, 8-11, 8-16
1702773	8-5, 8-12, 8-16
1702928	8-16
1703464	7-15, 7-27, 7-39, 8-5, 8-12, 8-16
1703811	8-5, 8-11, 8-16, 8-17
1703813	8-5
1703814	8-5, 8-11, 8-16, 8-17
1703819	4-23, 8-5, 8-11, 8-16
1703822	8-5, 8-11, 8-16
1703834	8-11
1703856	8-12
1704016	8-5, 8-11, 8-16
1704277	8-5, 8-11, 8-16
1704339	8-12
1704340	8-12
1704341	8-12
1704344	8-12
1704412	8-5, 8-11, 8-16
1705051	10-3
1705052	1-25, 10-3
1705303	8-13
1705304	10-2
1705638	8-6, 8-13
1705639	8-6, 8-13
1705640	8-6, 8-13
1705641	8-6, 8-13
1705647	8-6, 8-13
1705648	8-18
1705666	8-17
1705667	8-17
1705668	8-17
1705670	8-16
1705671	8-16
1705673	8-16
1705676	4-23
1705679	8-5, 8-12
1705680	8-5, 8-11
1705681	8-5, 8-12
1705686	8-5
1705692	8-5, 8-11, 8-16
1705693	8-5, 8-11, 8-16
1705694	8-5, 8-11
1705695	8-5, 8-11
1705696	2-7
1705697	2-7
1705698	2-7
1705699	8-6, 8-13
1705704	8-17
1705717	8-12
1705718	8-12
1705719	8-12
1705720	8-11
1705721	8-12
1705722	8-11
1705723	8-11
1705724	8-12
1705725	8-12
1705726	8-11
1705727	8-12
1705754	2-4
1705781	8-5, 8-12, 8-16
1705819	8-17
1705880	8-6, 8-13
1705887	8-17
1705894	8-11
1705941	8-6, 8-13
1705942	8-17
1705943	8-12
1705944	8-12
1705945	8-12
1705946	8-11
1706052	8-12
1706053	8-12
1706056	8-12
1706057	8-11
1706310	8-6, 8-13, 8-18
1706311	8-6, 8-13
1706312	8-18
1706331	10-5
1706350	2-4
1706679	2-11
1706749	1-25
1706765	1-25
1706922	10-2
1930ES	1-1
2080040	4-7, 4-8, 4-11, 4-15, 4-16, 4-19, 4-20, 8-5, 8-11, 8-16
2080057	8-5, 8-11, 8-16
2110404	1-3, 5-9, 6-3
2220882	5-6
2220883	5-5, 5-6
2300028	10-3
2300042	10-3
2400093	9-1
2420172	2-7
2460042	10-3
2540042	7-10, 7-22, 7-34
2540045	4-4
2560088	4-8, 4-11, 4-16, 4-20
2560179	4-23
2560191	4-8, 4-11, 4-15, 4-19
2560205	7-25, 7-37
2600281	4-7, 4-11, 4-15, 4-19
2753883	6-3
2755056	6-3
2755061	6-3
2760115	4-23
2780266	1-3
2792599	6-3
2820026	7-10, 7-12, 7-22, 7-24, 7-34, 7-36

SECTION 11 PART NUMBER INDEX

Part Number	Page
2820028	7-10, 7-12, 7-22, 7-24, 7-34, 7-36
2820097	4-7, 4-15, 4-19
2820239	1-25
2860030	2-7, 9-1
2890186	10-1
2901443	7-19, 7-31, 7-43, 10-5
2902267	8-6, 8-12, 8-16
2902278	8-12
2902301	8-12
2902302	8-12
2902331	10-1
2902335	8-12
2902378	8-12
2902405	10-3
2902431	7-18, 7-30, 7-41
2902448	4-7
2902449	4-8
2902455	3-3
2902475	3-17
2902489	4-20
2902490	4-19
2902491	4-19
2902492	4-15
2902493	4-15
2902494	4-16
2902496	4-7
2902499	3-7
2902500	3-12
2902522	8-6
2902523	8-16
2902524	8-12
2902525	8-12
2902526	8-12
2902528	8-12
2902532	8-12
2902535	4-11
2902536	4-12
2902541	7-17, 7-29, 7-41
2915012	1-4
2915013	1-4
2915016	10-1
2915230	1-22, 10-5
2915240	4-4
2915241	4-4
2920026	2-7
2920094	2-7
2920161	1-27, 7-15, 7-27, 7-39
2930005	1-27
2940064	4-7, 4-15, 4-19
2940174	2-3
2940175	2-3
3010088	4-7, 4-15, 4-19
3010158	1-17, 1-19
3080007	4-7, 4-11, 4-15, 4-19, 9-1
3121275	1-1
3125053	10-3
3128145	10-3
3128601	1-4
3128703	1-4
3200454	3-4, 3-8, 3-13, 3-17
3251813	8-6, 8-13
3252098	8-12
3252507	7-15, 7-27, 7-39, 8-5, 8-12, 8-16
3290405	1-17, 1-19, 1-27, 4-24, 7-17, 7-29, 7-41
3290605	1-13, 1-17, 1-19, 1-27, 2-3, 2-4, 7-11, 7-17, 7-23, 7-24, 7-29, 7-35, 7-36, 7-41
3290606	1-13, 4-7, 4-8, 4-11, 4-15, 4-16, 4-19, 4-20, 7-12, 7-24, 7-35, 7-36
3290607	1-27, 7-17, 7-29, 7-41
3290805	1-25, 4-24
3290806	4-7, 4-8, 4-11, 4-16, 4-20
3291005	1-17, 1-19, 1-27, 3-3, 3-7, 3-8, 3-12, 3-13, 3-16, 3-17, 4-3, 4-4, 4-7, 4-11, 4-15, 4-19, 7-12
3291007	3-3, 3-12, 3-17
3300423	1-3
3300473	4-23
3300477	4-19
3321005	2-8
3321402	3-4, 3-8, 3-13, 3-17, 5-7
3340612	4-8, 4-11, 4-16, 4-20
3340957	3-8, 3-13, 3-17
3340962	3-3, 3-7, 3-12, 3-16
3340964	3-3
3340965	4-3
3340968	4-23
3340975	2-4
3340976	4-3
3380475	4-23
3420156	3-7, 3-12, 3-16
3422997	3-7, 3-12, 3-16
3422998	3-12, 3-16
3423009	3-16
3423011	3-16
3423014	3-7, 3-12, 3-16
3423026	3-16
3423031	3-3
3423032	3-3
3423036	3-7, 3-12
3423037	1-3
3423038	3-3, 3-7, 3-12
3423039	3-12
3423042	3-3
3423045	1-17, 1-19
3423049	4-3
3423067	3-7, 3-12
3423170	3-17
3423189	1-17, 1-19
3423239	3-3
3423255	3-17
3423259	3-8, 3-13
3423267	1-17, 1-19
3423278	4-11, 4-16, 4-20
3423289	1-19
3450303	3-3
3450406	1-3
3510888	4-4
3510890	4-4
3510892	4-4
3520072	4-7, 4-11, 4-15, 4-19
3520193	2-7
3574067	4-3
3574159	3-3
3574161	3-7, 3-12, 3-16
3574176	1-17, 1-19
3574184	4-7, 4-11, 4-15
3574636	8-17
3574714	1-13
3574981	2-3
3574984	2-3
3575794	4-24
3576093	3-3
3576349	1-27
3576645	4-7
3576646	4-19
3576932	4-11, 4-15
3641604	4-8
3641605	4-8
3641606	4-8
3641607	4-19
3641608	4-19
3641609	4-19
3641610	4-19
3641611	4-19
3641612	4-19
3641613	4-19
3641614	4-15, 4-20
3641615	4-15, 4-20
3641616	4-15
3641617	4-15
3641618	4-15
3641619	4-11, 4-16
3641620	4-11, 4-16
3641621	4-16
3641622	4-16
3641650	4-11
3641651	4-11
3641652	4-11
3641653	4-11
3641654	4-11
3730119	7-12, 7-24, 7-36
3740146	9-1
3740150	1-13, 7-14, 7-26, 7-38, 9-1
3760115	1-17, 1-19, 3-3
3760170	3-3
3760348	1-17, 1-19
3760387	3-7, 3-12, 3-16
3760463	1-3
3820019	4-8, 4-11, 4-16, 4-20
3820032	2-4
3841143	3-3, 3-7, 3-12, 3-16
3841716	4-7, 4-11, 4-15, 4-19
3860104	3-16
3860107	3-12
3860111	4-8, 4-11, 4-16, 4-20
3860118	4-4
3900333	4-23
3900336	2-7
3900338	2-7, 4-24
3900339	2-7
3900345	4-8, 4-11, 4-16, 4-20
3900351	1-17, 4-3, 7-12
3900356	2-7
3990010	7-19, 7-31, 7-42, 9-1
3990013	7-34
4010405	7-17, 7-29, 7-41
4010408	7-17, 7-29, 7-41
4010415	1-17, 1-19
4010612	7-17, 7-29, 7-41
4010616	4-7, 4-11, 4-15, 4-19, 7-12, 7-24, 7-35
4010617	4-11, 4-16, 4-20
4010618	4-7, 4-8, 4-11, 4-12, 4-16, 4-19, 4-20
4031512	1-17, 1-19
4031607	2-11
4031713	2-3, 7-23, 7-35
4060865	1-27
4071094	3-7, 3-12, 3-17
4071102	2-4
4160078	3-4, 3-8, 3-13, 3-17, 5-7
4160202	1-17, 1-19
4160203	4-23
4191306	4-23
4191407	4-23
4191409	4-23
4191706	1-13, 1-14, 1-21, 1-25, 3-4, 3-8, 3-13, 3-17, 7-17, 7-29, 7-41
4191707	1-21, 1-25, 1-27, 2-3
4191708	1-13, 7-17, 7-29, 7-41
4191709	1-13
4220252	2-4

Part Number	Page
4220253	2-4
4220287	1-17
4220293	1-19
4240003	7-18, 7-30, 7-42
4240147	1-13
4240172	2-4
4340739	2-7
4340751	1-13
4340914	4-4
4341055	10-5
4360069	2-7, 9-1
4360328	2-7, 9-1
4360336	7-19, 7-31, 7-42, 9-1
4360387	2-11, 7-18, 7-30, 7-42, 9-1
4360469	2-7, 9-1
4360470	2-7, 9-1
4360475	2-7, 4-23, 9-1
4360482	10-3
4360526	3-4, 3-8, 3-13, 3-17, 7-14, 7-26, 7-38
4360538	4-23, 9-1
4360539	4-23, 7-14, 7-26, 7-38, 9-1
4360613	7-18, 7-30, 7-42, 9-1
4420037	4-20
4420051	8-17
4420070	1-27, 3-4, 3-17
4420071	4-4
4420072	4-4
4420073	4-4
4420074	4-4
4420075	4-4
4420080	1-27, 3-17
4460138	7-17, 7-18, 7-29, 7-30, 7-40, 7-42
4460226	7-10, 7-14, 7-19, 7-22, 7-26, 7-31, 7-34, 7-38, 7-43
4460227	1-21, 7-11, 7-14, 7-23, 7-26, 7-35, 7-38
4460265	7-10, 7-22, 7-34
4460266	7-14, 7-26, 7-38
4460267	7-10, 7-12, 7-19, 7-22, 7-24, 7-31, 7-34, 7-36, 7-42
4460268	7-12, 7-24, 7-36
4460315	7-16, 7-27, 7-39
4460320	7-10, 7-22, 7-34
4460321	7-12, 7-19, 7-24, 7-31, 7-36, 7-43
4460346	7-16, 7-28, 7-40
4460374	7-10, 7-23, 7-34
4460375	7-10, 7-23, 7-34
4460418	7-12, 7-24, 7-36
4460419	7-12, 7-24, 7-36
4460424	1-21, 7-14, 7-19, 7-26, 7-31, 7-38, 7-42
4460428	7-16, 7-28, 7-40
4460464	1-21, 7-10, 7-11, 7-12, 7-14, 7-15, 7-19, 7-22, 7-23, 7-24, 7-26, 7-27, 7-31, 7-34, 7-35, 7-36, 7-38, 7-42
4460465	7-10, 7-11, 7-12, 7-13, 7-14, 7-15, 7-22, 7-23, 7-24, 7-25, 7-26, 7-27, 7-34, 7-35, 7-36, 7-37, 7-38, 7-39
4460466	7-10, 7-12, 7-19, 7-22, 7-24, 7-31, 7-34, 7-36, 7-42
4460467	7-19, 7-31, 7-43, 10-5
4460493	7-12, 7-24, 7-36
4460496	7-10, 7-22, 7-34
4460497	7-10, 7-22, 7-34
4460508	7-14, 7-26, 7-37
4460509	7-14, 7-25, 7-37
4460510	7-19, 7-31, 7-43, 10-5
4460536	7-14, 7-15, 7-26, 7-27, 7-38
4460539	7-10, 7-11, 7-23, 7-35
4460618	7-25, 7-37
4460633	7-16, 7-28, 7-40
4460648	1-21, 7-11, 7-14, 7-23, 7-26, 7-35, 7-38
4460662	7-16, 7-28, 7-40
4460754	7-12, 7-24, 7-36
4460761	7-11, 7-23, 7-35
4460779	7-18, 7-30, 7-42
4460868	7-19, 7-31, 7-43
4460871	7-11, 7-23, 7-35
4460873	7-11, 7-23, 7-35
4460877	7-19, 7-31, 7-43
4460891	7-11, 7-13, 7-14, 7-15, 7-23, 7-25, 7-26, 7-27, 7-35, 7-37, 7-38, 7-39
4460894	7-11, 7-23, 7-35
4460897	7-11, 7-23, 7-35
4460899	1-21, 7-11, 7-14, 7-19, 7-23, 7-26, 7-31, 7-35, 7-38, 7-42
4460928	7-12, 7-24, 7-36
4460929	7-12, 7-24, 7-36
4460930	7-10, 7-22, 7-34
4460931	7-11, 7-12, 7-23, 7-24, 7-35, 7-36
4460942	7-11, 7-23, 7-35
4460943	7-11, 7-12, 7-23, 7-24, 7-35, 7-36
4460944	7-10, 7-12, 7-22, 7-24, 7-34, 7-36
4460956	7-18, 7-29, 7-41
4460957	7-17, 7-29, 7-41
4460961	7-12, 7-24, 7-36
4461016	7-10, 7-22, 7-34
4461057	7-10, 7-22, 7-34
4461076	7-12, 7-24, 7-36
4461077	7-12, 7-24, 7-36
4461196	1-22, 7-14, 7-17, 7-26, 7-29, 7-38, 7-41
4461197	7-17, 7-29, 7-41
4461198	7-16, 7-28, 7-40
4461199	1-22, 7-17, 7-29, 7-41
4461200	7-17, 7-29, 7-41
4461201	7-16, 7-28, 7-40
4461202	1-22, 7-17, 7-29, 7-40, 7-41
4461203	7-17, 7-29, 7-40, 7-41
4461204	7-16, 7-28, 7-40
4461205	1-22, 7-17, 7-29, 7-40, 7-41
4461206	7-17, 7-29, 7-40, 7-41
4461207	7-16, 7-28, 7-40
4461244	7-16, 7-28, 7-40
4461245	7-16, 7-28, 7-40
4461246	7-16, 7-28, 7-40
4461249	1-22, 7-17, 7-29, 7-41
4461250	7-17, 7-29, 7-41
4461257	7-16, 7-28, 7-40
4461258	7-16, 7-28, 7-40
4461260	7-14, 7-26, 7-37
4461261	7-14, 7-25, 7-37
4520565	1-4
4520676	1-4
4568667	4-11, 4-16, 4-20
4568738	4-23
4569305	4-8
4569310	4-20
4569319	4-16
4569404	4-11, 4-16, 4-20
4569428	4-11
4661199	7-14, 7-26, 7-38
4661202	7-15, 7-26, 7-38
4661205	7-15, 7-26, 7-38
4661249	7-15, 7-26, 7-38
4740086	1-17, 1-19
4740438	3-7, 3-12, 3-16
4740468	1-3
4740524	1-3
4740531	3-3
4740545	7-10, 7-22, 7-34
4740562	1-25
4740564	1-3
4750800	1-27, 2-4
4751000	2-8
4751400	1-13, 1-27, 7-24, 7-36
4811400	4-24, 7-17, 7-29, 7-41
4811600	2-4, 2-11
4811700	1-14, 1-17, 1-19, 1-21, 1-25, 1-27, 2-3, 7-17, 7-29, 7-41
4811702	7-11
4811900	1-14, 4-7, 4-11
4812000	1-3, 1-17, 1-19, 3-3, 3-7, 3-12, 3-17, 4-3, 4-4, 4-7, 4-11, 4-15, 4-19, 7-12
4831700	1-13
4846684	3-16
4846723	4-8, 4-12, 4-16, 4-20
4846752	3-12
4846757	1-3
4846764	4-4
4846768	4-4
4846775	1-17
4846811	1-19
4846812	1-27
4846813	1-27
4846816	1-17
4846861	1-17
4846862	1-19
4846863	1-17
4922870	4-23, 7-10, 7-22, 7-34
4922944	7-18, 7-30, 7-42, 10-1
4923365	7-13
4923366	7-13
4923367	7-13
4923374	7-13
4923389	7-18, 7-30, 7-42
4923390	7-18, 7-30, 7-42
4923391	7-18, 7-30, 7-42
4923392	7-19, 7-31, 7-42
4923393	7-19, 7-31, 7-42
4923401	7-37
4923402	7-37
4923406	7-37
4923409	7-37
4923413	7-13, 7-25
4923414	7-13, 7-25
4923602	1-14, 7-14, 7-26, 7-37
4923647	7-11
4923648	7-13
70000082	4-27

SECTION 11 PART NUMBER INDEX

Part Number	Page
70000084	4-27
70000107	5-9
70000108	5-9
70000110	5-9
70000191	1-8
70000335	5-5
70000383	1-9
70000555	10-5
70000658	5-5
70000659	5-5
70000683	4-27
70000684	4-27
70000685	4-27
70000686	4-27
70000790	1-8
70000791	1-8
70000792	1-9
70000798	5-6, 9-1
70000799	5-6, 9-1
70001250	4-27
70001251	4-27
70001252	4-27
70001253	4-27
70001263	1-9
70001265	1-10
70001345	1-9
70001442	7-13, 7-25, 7-37
70001443	7-13, 7-25, 7-37
70001444	7-13, 7-25, 7-37
70001709	5-7
70001739	1-8
70001878	3-4, 3-7, 3-13, 3-17, 5-7
70001949	1-9
70001982	5-7
70002682	1-13
70002683	1-13
70003645	5-4
70003646	5-4
70003650	4-27
70010346	10-3
7002821	7-19, 7-31, 7-43, 10-5
7002822	10-5
7002823	7-19, 7-31, 7-43, 10-5
7002826	10-5
7002828	7-19, 7-31, 7-43, 10-5
7004275	10-5
7004276	10-5
7010641	1-3
7010642	1-3
7012524	1-3
7016319	1-27
7016372	1-27
7016654	10-5
7019697	1-3
7020175	2-7, 4-23
7020176	2-7, 4-23
7020218	3-4, 3-7, 3-13, 3-17, 5-7
7023528	5-7
7023529	5-6
7023530	5-6
7023531	5-6
7023532	5-6
7023533	5-6
7023534	5-6
7023535	5-4
7023536	5-6
7023537	5-6
7023538	5-6
7023539	5-4
7023542	5-6
7023543	5-6
7023544	5-7
7023545	5-6
7023546	5-6
7023547	5-6
7023548	5-6
7023549	5-4
7023550	5-6
7023551	5-6
7023552	5-6
7023553	5-6
7023554	5-7
7023556	5-6
7023557	5-4
7023558	5-4
7023559	5-9
7023560	5-9
7023561	5-9
7023562	5-9
7023563	5-9
7023564	5-9
7023565	5-9
7023568	5-4
7023569	5-4
7023570	5-5
7023571	5-5
7023572	5-5
7023573	5-5
7023574	5-5
7023575	5-5
7023576	5-5, 9-1
7023577	5-4
7023578	5-4
7023579	5-5
7023580	5-5
7023581	5-5
7023582	5-5
7023583	5-4
7023584	5-5
7023585	5-4
7023586	5-5
7023587	5-4
7023588	5-5
7023589	5-4
7023591	5-5
7023593	5-4, 9-1
7024747	1-9
7024748	1-9
7024749	1-9
7024750	1-9
7024756	1-9
7024757	1-8
7024758	1-9
7024770	1-9
7024771	1-10
7024772	1-10
7024773	1-10
7024774	1-9
7024775	1-9
7024776	1-10
7024777	1-9
7024785	1-9
7024786	1-8
7024787	1-10
7026183	1-4
7026184	1-4
7026185	1-3
7027365	4-27
7027367	4-27, 9-1
7027765	4-27
7027766	4-27
7027863	2-3

3121275

An Oshkosh Corporation Company

Corporate Office
JLG Industries, Inc.
1 JLG Drive
McConnellsburg PA. 17233-9533
USA
(717) 485-5161
(717) 485-6417

JLG Worldwide Locations

JLG Industries (Australia)
P.O. Box 5119
11 Bolwarra Road
Port Macquarie
N.S.W. 2444
Australia
+61 2 65 811111
+61 2 65 813058

JLG Latino Americana Ltda.
Rua Eng. Carlos Stevenson,
80-Suite 71
13092-310 Campinas-SP
Brazil
+55 19 3295 0407
+55 19 3295 1025

JLG Industries (UK) Ltd
Bentley House
Bentley Avenue
Middleton
Greater Manchester
M24 2GP - England
+44 (0)161 654 1000
+44 (0)161 654 1001

JLG France SAS
Z.I. de Baulieu
47400 Fauillet
France
+33 (0)5 53 88 31 70
+33 (0)5 53 88 31 79

JLG Deutschland GmbH
Max-Planck-Str. 21
D - 27721 Ritterhude - Ihlpohl
Germany
+49 (0)421 69 350 20
+49 (0)421 69 350 45

JLG Equipment Services Ltd.
Rm 1107 Landmark North
39 Lung Sum Avenue
Sheung Shui N. T.
Hong Kong
(852) 2639 5783
(852) 2639 5797

JLG Industries (Italia) s.r.l.
Via Po. 22
20010 Pregnana Milanese - MI
Italy
+39 029 359 5210
+39 029 359 5845

Oshkosh-JLG Singapore
Technology Equipment Pte
Ltd
29 Tuas Ave 4,
Jurong Industrial Estate
Singapore, 639379
+65-6591 9030
+65-6591 9031

Plataformas Elevadoras
JLG Iberica, S.L.
Trapadella, 2
P.I. Castellbisbal Sur
08755 Castellbisbal, Barcelona
Spain
+34 93 772 4700
+34 93 771 1762

JLG Sverige AB
Enkopingsvagen 150
Box 704
SE - 176 27 Jarfalla
Sweden
+46 (0)850 659 500
+46 (0)850 659 534

www.jlg.com